LCD Monitor

User Manual

PhotoVue Photographer Monitor | SW Series

AQCOLOR®
Colors You Can Trust

Copyright

Copyright © 2024 by BenQ Corporation. All rights reserved. No part of this publication may be reproduced, transmitted, transcribed, stored in a retrieval system or translated into any language or computer language, in any form or by any means, electronic, mechanical, magnetic, optical, chemical, manual or otherwise, without the prior written permission of BenQ Corporation.

Disclaimer

BenQ Corporation makes no representations or warranties, either expressed or implied, with respect to the contents hereof and specifically disclaims any warranties, merchantability or fitness for any particular purpose. Further, BenQ Corporation reserves the right to revise this publication and to make changes from time to time in the contents hereof without obligation of BenQ Corporation to notify any person of such revision or changes.

BenQ flicker-free technology maintains a stable backlight with a DC dimmer that eliminates the primary cause of monitor flicker, making it easier on the eyes. The performance of flicker-free may be affected by external factors such as poor cable quality, unstable power supply, signal interference, or poor grounding, and not limited to the above mentioned external factors. (Applicable for flicker-free models only.)

BenQ ecoFACTS

BenQ has been dedicated to the design and development of greener product as part of its aspiration to realize the ideal of the "Bringing Enjoyment 'N Quality to Life" corporate vision with the ultimate goal to achieve a low-carbon society. Besides meeting international regulatory requirement and standards pertaining to environmental management, BenQ has spared no efforts in pushing our initiatives further to incorporate life cycle design in the aspects of material selection, manufacturing, packaging, transportation, using and disposal of the products. BenQ ecoFACTS label lists key eco-friendly design highlights of each product, hoping to ensure that consumers make informed green choices at purchase. Check out BenQ's CSR Website at http://csr.BenQ.com/ for more details on BenQ's environmental commitments and achievements.

Product support

This document aims to provide the most updated and accurate information to customers, and thus all contents may be modified from time to time without prior notice. Please visit the website for the latest version of this document and other product information. Available files vary by model.

1. Make sure your computer is connected to the Internet.
2. Visit the local website from Support.BenQ.com. The website layout and content may vary by region/country.
   - User manual and related document
   - Drivers and applications
   - (EU only) Dismantled information: Available on the user manual download page. This document is provided based on Regulation (EU) 2019/2021 to repair or recycle your product. Always contact the local customer service for servicing within the warranty period. If you wish to repair an out-of-warranty product, you are recommended to go to a qualified service personnel and obtain repair parts from BenQ to ensure compatibility. Do not disassemble the product unless you are aware of the consequences. If you cannot find the dismantled information on your product, contact the local customer service for assistance.

Firmware upgrade

You are recommended to upgrade the product to the latest firmware version (if available) and refer to the most up-to-date user manual to make best use of the product.

To upgrade your monitor, download and install the **Display QuicKit** software from the BenQ website.

- Support.BenQ.com > model name > **Software & Driver** > **Display QuicKit** (available only when your monitor is compatible)
- Support.BenQ.com > **Display QuicKit** (availability may vary by region)

The software utility checks the compatibility of your monitor automatically once launched. Refer to the user manual of the software utility for instructions.

If your monitor is not compatible with **Display QuicKit**, and you wonder if there is an updated firmware version available, please contact BenQ customer service.

Advanced software

Apart from the built-in technologies and features available on this product, you are provided with more software applications to enhance and extend the product functionality. Download the software and its user guide as instructed from the BenQ website.

• **Palette Master Ultimate**

The **Palette Master Ultimate** software simplifies and speeds up calibration and reliably produces accurate color results. With flexible and friendly UI design, it helps suit your preferences in color reproduction. **Palette Master Ultimate** can be used to fine-tune the color engine in certain BenQ monitors and fully supports X-Rite / Calibrite / Datacolor calibrators.

• **Paper Color Sync**

The **Paper Color Sync** software helps sync the color settings between the image, the computer, and the printer so the printing result is predictable.

EPREL Registration Number:
SW242Q: 1888507
SW272Q: 1435113
SW272U: 1435117

Q&A index

Start with the topics that you are interested in.

Setup

How to set up the monitor and turn it on?

Safety precautions 6
How to assemble your monitor hardware 24
Adjusting the monitor height 39

How to avoid unwanted lights on the screen?

Installing shading hood (optional step) 34

How to adjust the monitor viewing angle?

Viewing angle adjustment 41

How to install the shading hood?

Landscape installation 34
Portrait installation 36

How to wall mount the monitor?

Using the monitor wall mounting kit (purchased separately) 42

Calibration and image editing

How to calibrate the monitor?

Installing shading hood (optional step) 34
Palette Master Ultimate 3

What can be done before photo editing?

Installing shading hood (optional step) 34
Choosing an appropriate color mode 49
Minimizing the color difference between the screen and the hardcopy (Paper Color Sync) 50

What can be done before video post-production?

Installing shading hood (optional step) 34
Choosing an appropriate color mode 49
Working with HDR technology 48
Working with SDI devices 50

How to make color consistency easily between the screen and the hardcopy?

Minimizing the color difference between the screen and the hardcopy (Paper Color Sync) 50

Input source and image display

How to switch the input sources?

Connect the PC video cable 26
Input 56

How to watch HDR content?

Working with HDR technology 48

How to view a vertical image on the monitor?
Rotating the monitor 39
How to view an image of two different color settings?
Working with two sets of color settings on the same image (GamutDuo) 50
Can I switch control between different monitors easily?
Working with more than one monitor (IR Channel Setting) 51
How to adjust the color settings?
5-way controller and basic menu operations 44
Color Adjustment menu 58
How to check the color data of the current display?
Viewing the current display settings 53

Menus and accessories

Can I set hot keys to frequently used functions or menus?
Customizing the Function Key 45
Customizing your Hotkey Puck G3 48
How to use the OSD menu?
5-way controller and basic menu operations 44
Navigating the main menu 55
What menu options are available to each color mode?
Available menu options to each color mode 61
Can I customize my monitor menus?
Customizing your monitor menus to work efficiently 51
Can I charge my device via the monitor's USB-C™ port?
Power delivery of USB-C™ port on your monitor 22

Maintenance and product support

How to clean the monitor?
Care and cleaning 8
Cleaning the LCD screen (SW242/SW272 only) 11
How to keep the monitor not in use for a long time?
How to detach the stand and the base 32
Care and cleaning 8
I need more support.
Product support 3
Servicing 9

Safety precautions

Power safety

Please follow these safety instructions for best performance, and long life for your monitor.

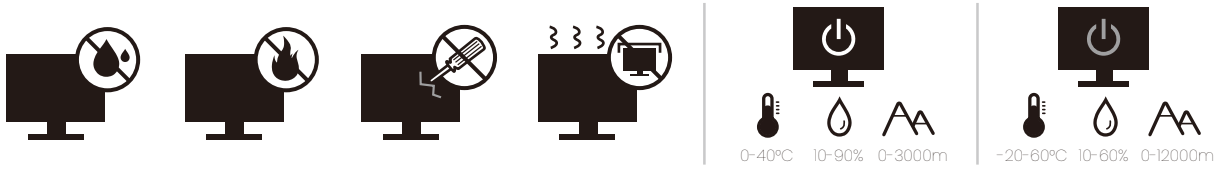

- The AC plug isolates this equipment from the AC supply.
- The power supply cord serves as a power disconnect device for pluggable equipment. The socket outlet should be installed near the equipment and be easily accessible.
- This product should be operated from the type of power indicated on the marked label. If you are not sure of the type of power available, consult your dealer or local power company.
- The Class I pluggable equipment Type A must be connected to protective earth.
- An approved power cord greater or equal to H03VV-F or H05VV-F, 2G or 3G, 0.75mm^2 must be used.
- Use only the power cord provided by BenQ. Never use a power cord that appears to be damaged or frayed.
- To avoid possible damage to the monitor, do not use it in a region where power supply is unstable.
- Ensure that the power cord is connected to a grounded power outlet before turning on the monitor.
- To avoid possible danger, observe the total electric load when using the monitor with a (multi-outlet) extension cord.
- Always turn off the monitor before unplugging the power cord.

For Germany only:

- (If the weight of the product is less than or equal to 3 kg) An approved power cord greater or equal to H03VV-F, 3G, 0.75mm^2 must be used.
- (If the weight of the product is more than 3 kg) An approved power cord greater or equal to H05VV-F or H05RR-F, 3G, 0.75mm^2 must be used.
- (If a remote control is provided) RISK OF EXPLOSION IF BATTERY IS REPLACED BY AN INCORRECT TYPE. DISPOSE OF USED BATTERIES ACCORDING TO THE INSTRUCTIONS.

For models with adapter:

- Use only the power adapter supplied with your LCD Monitor. Use of another type of power adapter will result in malfunction and/or danger.
- Allow adequate ventilation around the adapter when using it to operate the device or charge the battery. Do not cover the power adapter with paper or other objects that will reduce cooling. Do not use the power adapter while it is inside a carrying case.
- Connect the power adapter to a proper power source.
- Do not attempt to service the power adapter. There are no service parts inside. Replace the unit if it is damaged or exposed to excess moisture.

Installation

- Do not use your monitor under any of the following environmental conditions:
  - Extremely high or low temperature, or in direct sunlight
  - Dusty places
  - Highly humid, exposed to rain, or close to water
  - Exposed to vibrations or impacts in places such as cars, buses, trains, and other rail vehicles
  - Near heating appliances such as radiators, heaters, fuel stoves, and other heat-generating items (including audio amplifiers)
  - An enclosed place (such as a closet or bookcase) without appropriate ventilation
  - An uneven or sloping surface
  - Exposed to chemical substances or smoke
- Carry the monitor carefully.
- Do not place heavy loads on the monitor to avoid possible personal injury or damage to the monitor.
- Ensure that children do not hang or climb onto the monitor.
- Keep all packing bags out of reach of children.

Operation

- To protect your eyesight, please refer to the user manual to set the optimal screen resolution and the viewing distance.
- To reduce eye fatigue, take a break on a regular basis while using the monitor.
- Avoid taking either one of the following actions for a long time. Otherwise, burn marks may occur.
  - Play images that cannot occupy the screen entirely.
  - Place a still image on the screen.
- To avoid possible damage to the monitor, do not touch the monitor panel by finger tip, pen, or any other sharp objects.
- Excessively frequent plug and unplug of video connectors may cause damage to the monitor.
- This monitor is designed mainly for personal use. If you want to use the monitor in a public place or a harsh environment, contact your nearest BenQ service center for assistance.
- To avoid possible electric shock, do not dissemble or repair the monitor.
- If a bad smell or an abnormal sound appears to come from the monitor, contact your nearest BenQ service center for assistance immediately.

Caution

- The distance between you and the monitor should be 2.5 to 3 times the diagonal width of the screen.
- Looking at the screen for an extended period of time causes eye fatigue and may deteriorate your eyesight. Rest your eyes for 5 ~ 10 minutes for every 1 hour of product use.
- Reduce your eye strain by focusing on objects far way.
- Frequent blinking and eye exercise help keep your eyes from drying out.

Safety notice for remote control (applicable if a remote control is provided)

- Do not put the remote control in the direct heat, humidity, and avoid fire.
- Do not drop the remote control.
- Do not expose the remote control to water or moisture. Failure to do so could result in malfunction.
- Confirm there is no object between the remote control and the remote sensor of the product.
- When the remote control will not be used for an extended period, remove the batteries.

Battery safety notice (applicable if a remote control is provided)

The use of the wrong type of batteries may cause chemical leaks or explosion. Please note the following:

- Always ensure that the batteries are inserted with the positive and negative terminals in the correct direction as shown in the battery compartment.
- Different types of batteries have different characteristics. Do not mix different types.
- Do not mix old and new batteries. Mixing old and new batteries will shorten battery life or cause chemical leaks from the old batteries.
- When batteries fail to function, replace them immediately.
- Chemicals which leak from batteries may cause skin irritation. If any chemical matter seeps out of the batteries, wipe it up immediately using a dry cloth, and replace the batteries as soon as possible.
- Due to varying storage conditions, the battery life for the batteries included with your product may be shortened. Replace them within 3 months or as soon as you can after initial use.
- There may be local restrictions on the disposal or recycling of batteries. Consult your local regulations or waste disposal provider.

If the supplied remote control contains a coin / button cell battery, pay attention to the following notice as well.

- Do not ingest battery. Chemical Burn Hazard.
- The remote control supplied with this product contains a coin / button cell battery. If the coin / button cell battery is swallowed, it can cause severe internal burns in just 2 hours and can lead to death.
- Keep new and used batteries away from children. If the battery compartment does not close securely, stop using the product and keep it away from children.
- If you think batteries might have been swallowed or placed inside any part of the body, seek immediate medical attention.

Care and cleaning

- Do not place the monitor face down on the floor or a desk surface directly. Otherwise, scratches on the panel surface may occur.
- The equipment is to be secured to the building structure before operation.
- (For models that support wall or ceiling mounting)
    - Install your monitor and monitor mounting kit on a wall with flat surface.

  - Ensure that the wall material and the standard wall mount bracket (purchased separately) are stable enough to support the weight of the monitor.
  - Turn off the monitor and the power before disconnecting the cables from the LCD monitor.
- Always unplug the product from the power outlet before cleaning. Clean the LCD monitor surface with a lint-free, non-abrasive cloth. Avoid using any liquid, aerosol or glass cleaners.
- (SW242/SW272 only) To clean the monitor screen, see Cleaning the LCD screen (SW242/SW272 only) on page 11 for details.
- Slots and openings on the back or top of the cabinet are for ventilation. They must not be blocked or covered. Your monitor should never be placed near or over a radiator or heat sources, or in a built-in installation unless proper ventilation is provided.
- Do not place heavy loads on the monitor to avoid possible personal injury or damage to the monitor.
- Consider keeping the box and packaging in storage for use in the future when you may need to transport the monitor.
- Refer to the product label for information on power rating, manufacture date, and identification markings.

Servicing

- Do not attempt to service this product yourself, as opening or removing covers may expose you to dangerous voltages or other risks. If any of the above mentioned misuse or other accident such as dropping or mishandling occurs, contact qualified service personnel for servicing.
- For replacement of power cord, connection cables, remote control or power adapter, please contact BenQ customer service.
- Contact your place of purchase or visit the local website from Support.BenQ.com for more support.

Support.BenQ.com

General warranty information

Note that the monitor warranty may be void if any of the following conditions occurs:

- Documents required for warranty services have been altered by unauthorized use or is illegible.
- The model number or production number on the product has been altered, deleted, removed or made illegible.
- Repairs, modifications, or alterations have been made by unauthorized service organizations or persons.
- Damage caused by improper storage of the monitor (including but not limited to force majeure, direct exposure to sunlight, water, or fire).
- Reception problems occurred due to external signals (such as antenna, Cable TV) outside the monitor.
- Defects caused by abuse or misuse of the monitor.
- Before using the monitor, it is the sole responsibility of the user to check whether the monitor is compatible with local technical standards if the user brings the monitor out of its intended sales area. Failure to do so may cause product breakdown and the user will have the pay the repairing costs.

- It is the sole responsibility of the user if problems (such as data loss and system failure) occurred due to non-factory provided software, parts, and/or non-original accessories.
- Please use the original accessories (e.g. power cable) only with the device to avoid possible dangers such as electric shock and fire.

Typographics

Icon / Symbol	Item	Meaning
	Warning	Information mainly to prevent the damage to components, data, or personal injury caused by misuse and improper operation or behavior.
	Tip	Useful information for completing a task.
	Note	Supplementary information.

In this document, the steps needed to reach a menu may be shown in condensed form, for example: **Menu** > **System** > **Information**.

Cleaning the LCD screen (SW242/SW272 only)

Please follow these safety instructions for best performance, and long life for your monitor.

As your monitor panel comes with a special anti-glare coating, use and clean the monitor carefully.

- Stains on the monitor screen could be obvious. Be cautious when you use or clean the monitor and avoid getting oil or dust on the screen.
- Fingerprints and dust under normal use could be wiped away by the supplied cleaning cloth.
- Clean the screen surface gently and carefully. Hard scrubbing could damage the screen coating.

Be sure to follow the instructions to clean the screen surface appropriately.

Using the screen cleaning cloth (recommended)

There is one screen cleaning cloth in the product package. The supplied cleaning cloth is highly recommended to clean your monitor screen. It is an eco-friendly design as it is reusable, washable, and liquid-free.

1. Unplug the monitor from the power outlet before cleaning.
2. Make sure there is no sharp debris on the cleaning cloth to avoid scratching the screen.
3. Hold the edge of the monitor and avoid excessive force on the screen.
4. Make sure the supplied cleaning cloth is clean and dry. Start with a small, clean part of the cloth and wipe the stained area of the screen gently in circles. If it is still not clean, continue with another clean part of the cloth to avoid spreading the grease around. If both sides of the cloth are used and get dirty, wash and dry the cloth properly.

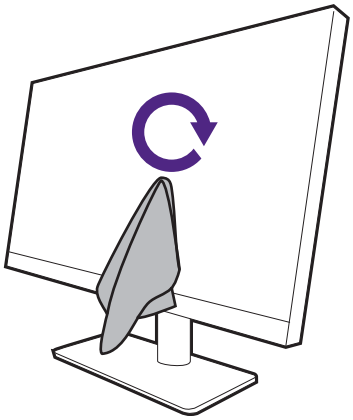

To prevent the seams around the cleaning cloth from marring the screen surface, avoid wiping the screen with the edge of the cleaning cloth.

5. If necessary, apply a small drop of 70% Isopropanol (IPA) or alcohol-free screen cleaner on a small, clean part of the supplied cleaning cloth, and wipe the stained area gently in circles. See Using a screen cleaner (purchased separately) on page 12 for more information.

6. Use a clean part of the cloth to wipe dry the screen completely.If it is still not clean, continue with another clean part of the cloth to avoid spreading the grease around. Repeat this step until the screen is clean.

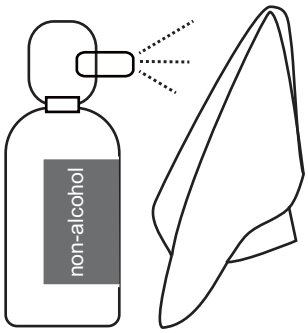

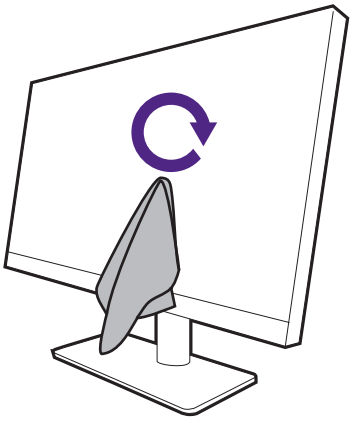

7. The cleaning cloth may get dirty after using several times and may not be able to clean the screen properly. Wash it with detergent and remove debris from it by hand if necessary. Keep it in a cool place until it is dry. Make sure it is completely dry before next cleaning.

Using a screen cleaner (purchased separately)

- Use screen cleaning wipes which are pre-moistened and alcohol-free. You can wipe away oil and fingerprints easily.
- Use a 70% Isopropanol (IPA) or alcohol-free screen cleaner kit. Spray on the microfiber cloth that came with the screen cleaner kit, and wipe stains off the screen. Never spray anything directly onto the screen.
- Make sure no liquid goes into the gap between the screen and the bezel. Liquids inside the monitor could cause short circuits.

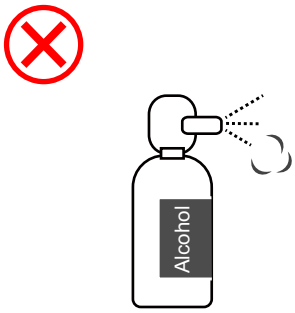

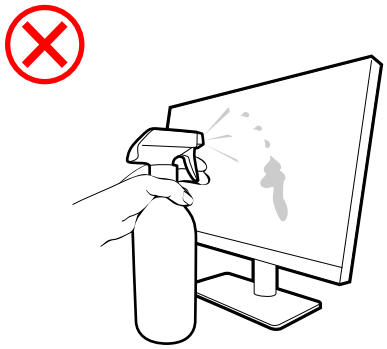

Table of Contents

Copyright 2

Product support 3

- Firmware upgrade 3
- Advanced software 3

Q&A index 4

Safety precautions 6

- Power safety 6
- Installation 7
- Operation 7
- Safety notice for remote control (applicable if a remote control is provided) 8
- Battery safety notice (applicable if a remote control is provided) 8
- Care and cleaning 8
- Servicing 9
- General warranty information 9

Cleaning the LCD screen (SW242/SW272 only) 11

- Using the screen cleaning cloth (recommended) 11
- Using a screen cleaner (purchased separately) 12

Getting started 15

Getting to know your monitor 18

- Front view 18
- Back view 19
- Connections 20
- Installing the batteries to Hotkey Puck G3 23

How to assemble your monitor hardware 24

- How to detach the stand and the base 32
- Installing shading hood (optional step) 34
- Adjusting the monitor height 39
- Rotating the monitor 39
- Viewing angle adjustment 41
- Using the monitor wall mounting kit (purchased separately) 42

How to adjust your monitor 43

- The control panel 43
- 5-way controller and basic menu operations 44
- Hotkey Puck G3 and its effective range 46
- Working with a Mac series product 48
- Working with HDR technology 48
- Adjusting the display color 49
- Adjusting display mode 49
- Choosing an appropriate color mode 49

Minimizing the color difference between the screen and the hardcopy (**Paper Color Sync**) .. 50
Working with SDI devices..... 50
Working with two sets of color settings on the same image (**GamutDuo**) 50
Customizing your monitor menus to work efficiently 51
Working with more than one monitor (**IR Channel Setting**) 51
Viewing the current display settings 53

Navigating the main menu 55
Display menu 56
Color Adjustment menu 58
GamutDuo menu 63
System menu 65
Custom Key menu 70
Information menu 72

Troubleshooting 73
Frequently asked questions (FAQ)..... 73
Need more help?..... 75

2024/01/13
SW272-EM-V3

Getting started

When unpacking please check you have the following items. If any are missing or damaged, please contact the place of purchase for a replacement.

BenQ LCD Monitor	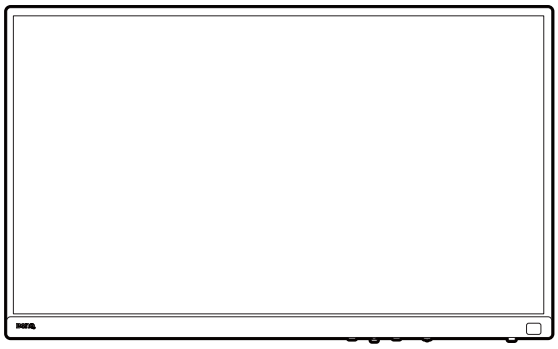
Monitor Stand	(SW272) 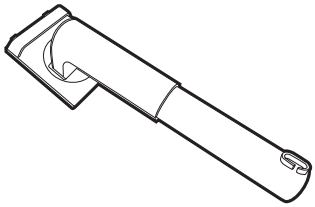 (SW242) 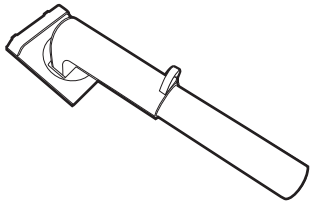
Monitor Base	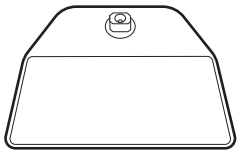
Screen Cleaning Cloth	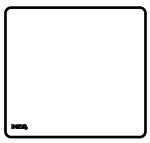
Quick Start Guide (attached to the monitor screen.)	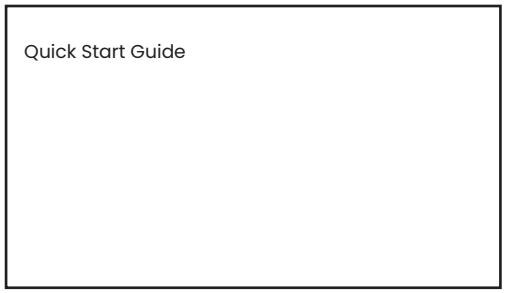

Safety Instructions	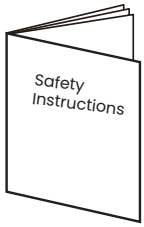
Regulatory Statements	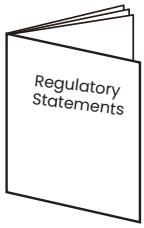
Power Cord (Supplied item may differ by model or region.)	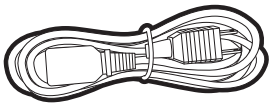
Video Cable: DP	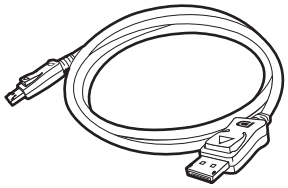
Video Cable: DP to mini DP (Optional accessory)	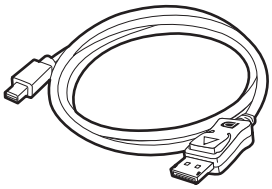
Video Cable: HDMI	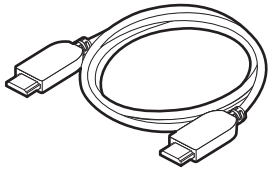
USB Cable: USB-C™	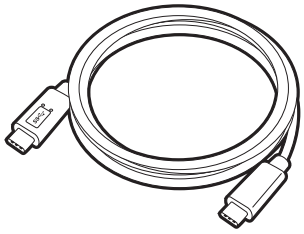
USB Cable	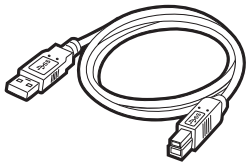

I/O Cover	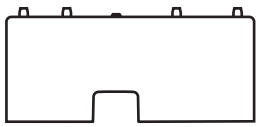
Hotkey Puck G3 (with two AAA Zinc-Carbon batteries) (SW272 only)	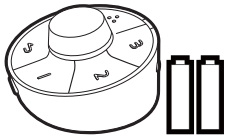
Shading hood (SW272U only)	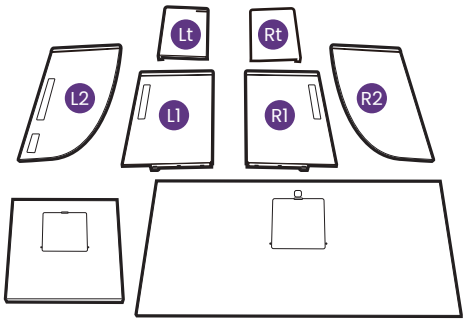
Shading hood for landscape orientation (SW272Q only)	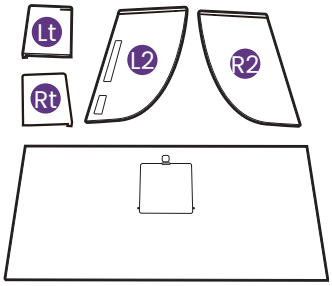

- Available accessories and the pictures shown here may differ from the actual contents and the product supplied for your region. And the package contents may subject to change without prior notice. For cables that are not supplied with your product, you can purchase them separately.
- Consider keeping the box and packaging in storage for use in the future when you may need to transport the monitor. The fitted foam packing is ideal for protecting the monitor during transport.
- Accessories and cables may be included or sold separately depending on the product supplied for your region.

Always keep the product and accessories out of reach of small children.

Getting to know your monitor

Front view

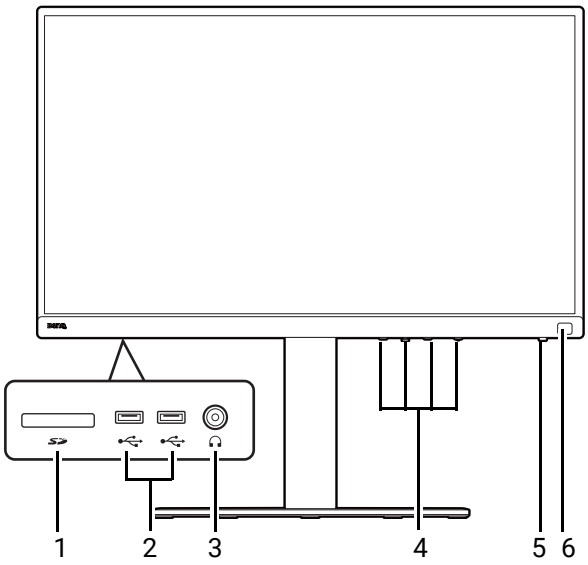

1. SD card slot
2. USB ports (downstream; connecting to USB devices)
3. Headphone jack
4. Control buttons
5. Power button and power LED indicator
6. (SW272) IR sensor (for Hotkey Puck G3)

Back view

SW272

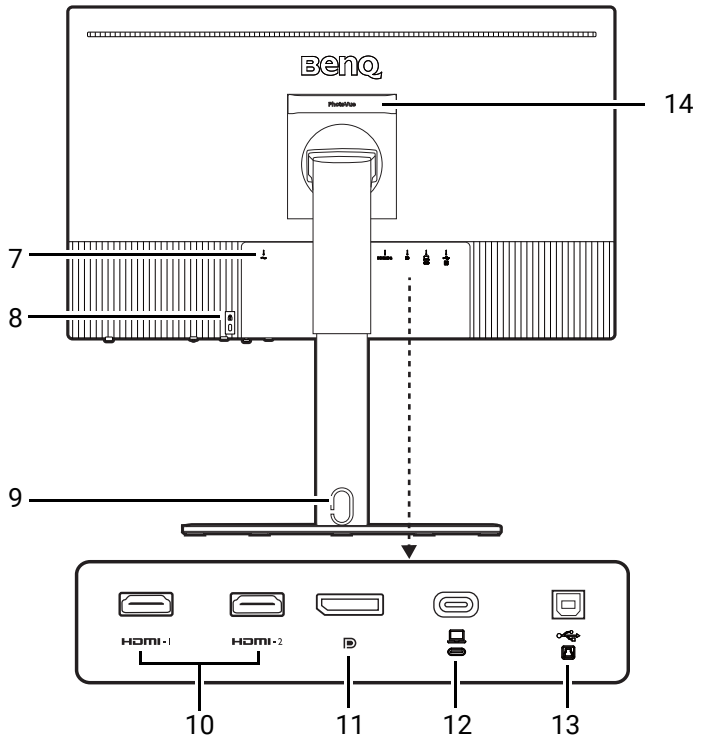

SW242

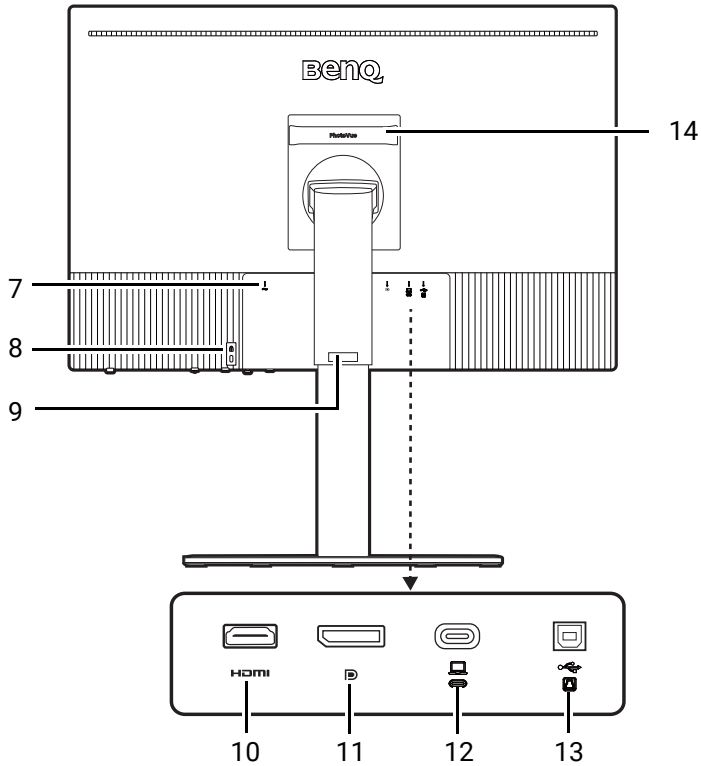

7. AC power input jack
8. Kensington lock slot
9. Cable management hole
10. HDMI sockets
11. DisplayPort socket
12. USB-C™ port (for video, data transfer and power delivery up to 90W)
13. USB port (upstream; connecting to the PC)
14. Handle

- Depending on the product specifications, the supported resolution and timing may vary.
- Above diagram may vary depending on the model.
- Picture may differ from product supplied for your region.
- (Applicable for products with white case) The case of the product may turn yellow in about 3 years due to the photo-oxidation reactions induced by light. This is a normal phenomenon and should not be considered as manufacturing defect.

Connections

The following connection illustrations are for your reference only. For cables that are not supplied with your product, you can purchase them separately.

For detailed connection methods, see page 26 - 29.

SW272

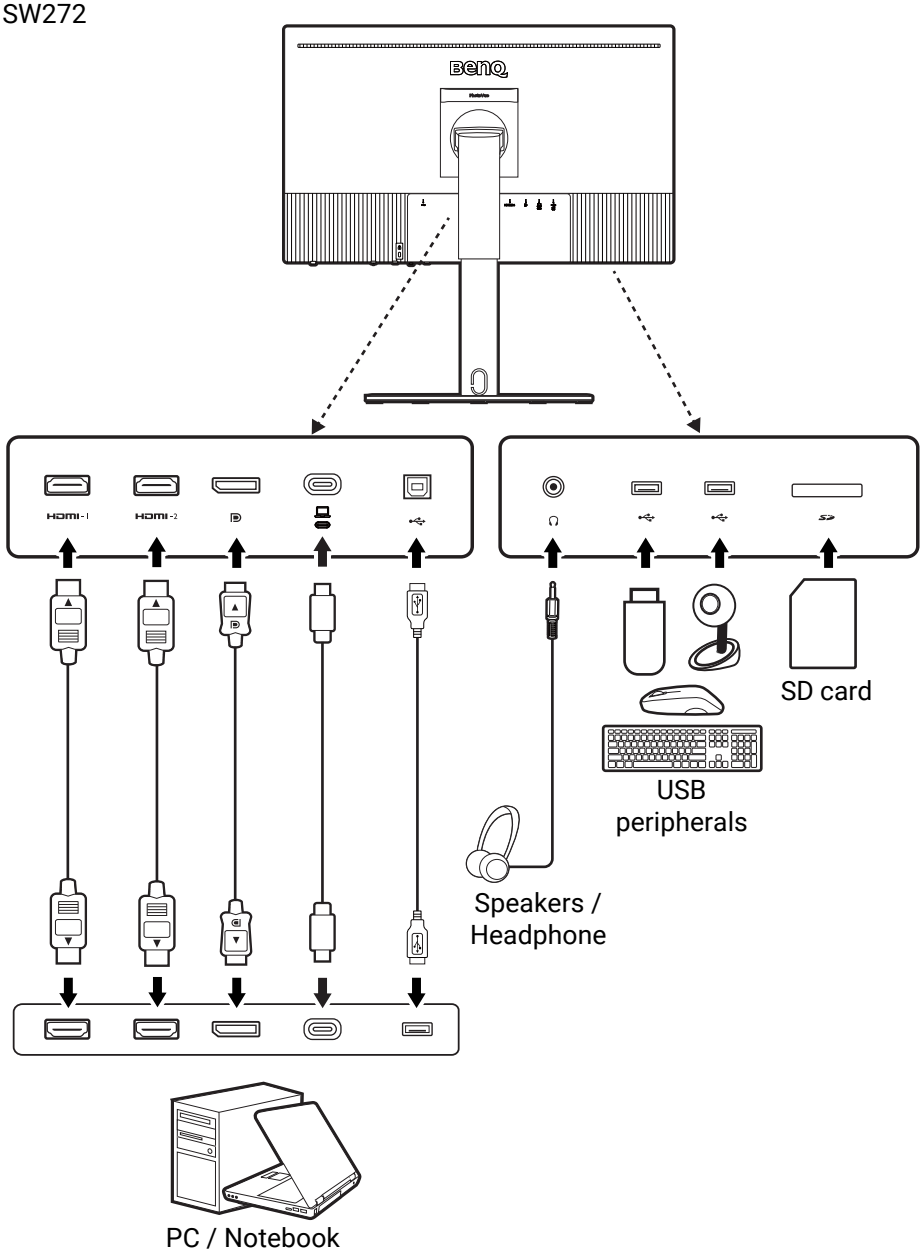

SW242Q

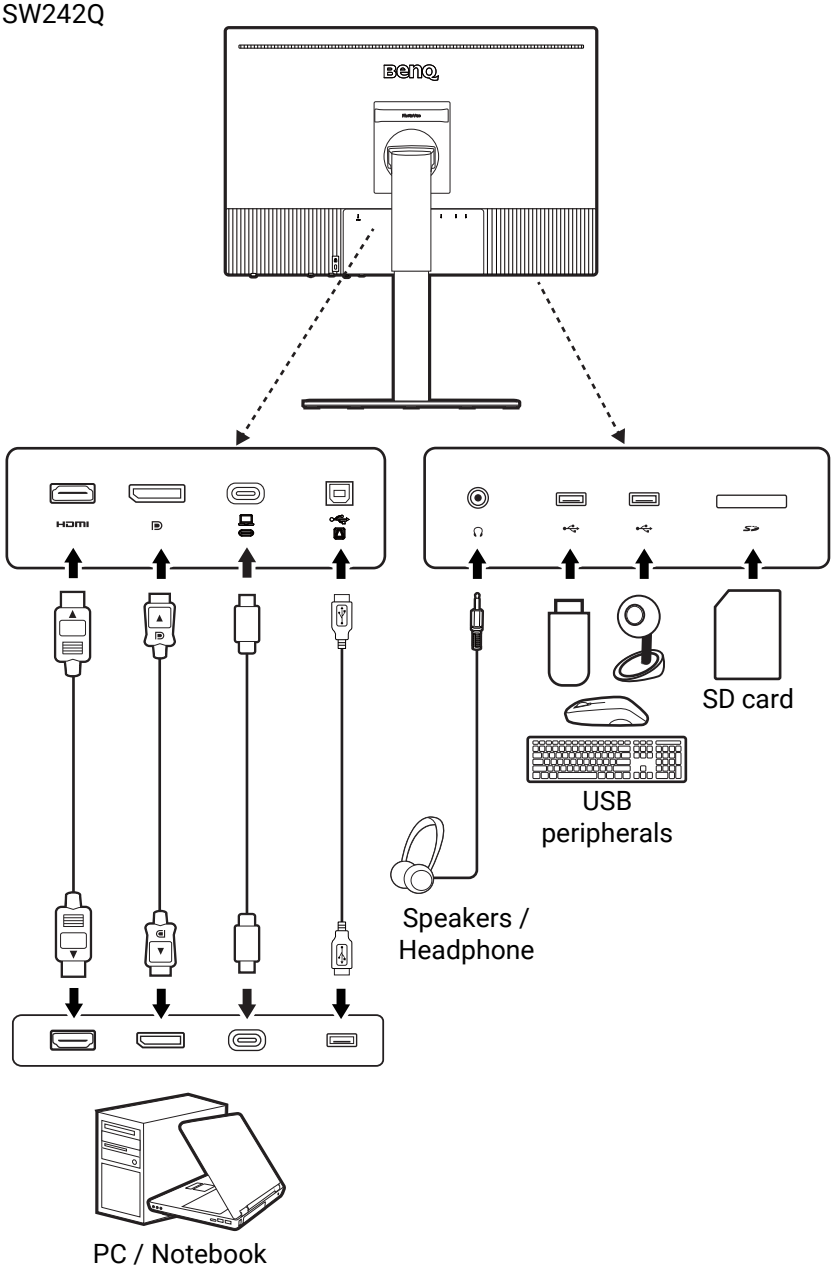

Due to USB-C™ technology limitation, the USB transmission speed is determined only by the selected refresh rate. See for USB-C Configuration on page 67 more information.

Power delivery of USB-C™ port on your monitor

With the power delivery function, your monitor helps supply power to the connected USB-C™ devices.

USB-C™ Power Delivery
5V / 3A
9V / 3A
12V / 3A
15V / 3A
20V / 4.5A

- A connected device needs to be equipped with a USB-C™ connector that supports charging function via USB power delivery.
- The connected device can be charged via USB-C™ port even when the monitor is in power saving mode. (*)
- The USB power delivery is up to 90W. If the connected device requires more than 90W for operation or for boot up (when the battery is drained), use the original power adapter that came with the device.
- The information is based on the standard testing criteria and is provided for reference. The compatibility is not guaranteed as the user environments vary. If a separately purchased USB-C™ cable is used, make sure the cable is certified by USB-IF and is full-featured, with power delivery and video / audio / data transfer functions.

*: Charging via USB-C™ in monitor power saving mode is available when the **Quick Awake** function is enabled. Go to **System** > **Quick Awake** and select **ON**.

Installing the batteries to Hotkey Puck G3

Applicable for models with Hotkey Puck G3.

1. Turn the battery cover counterclockwise to remove the battery cover.

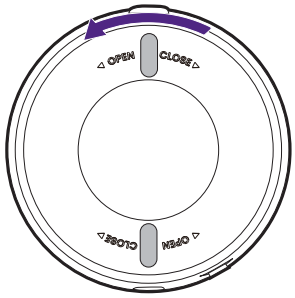

2. Insert the provided two AAA Zinc-Carbon batteries onto the battery holder properly.

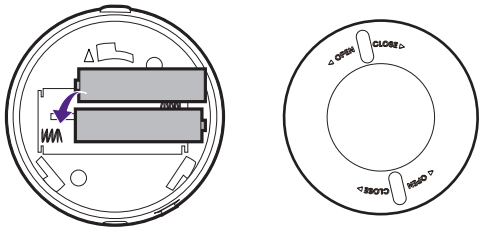

3. Put the battery cover back. Make sure the arrows inside the cover and on the Hotkey Puck G3 are aligned. Turn the battery cover clockwise until you cannot go further.

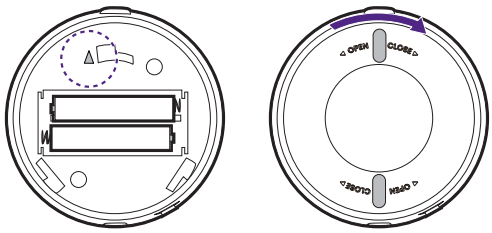

- Keep the batteries out of reach of children.
- If the Hotkey Puck G3 will not be used for an extended period of time, remove the batteries.

How to assemble your monitor hardware

- If the computer is turned on you must turn it off before continuing.
  Do not plug-in or turn-on the power to the monitor until instructed to do so.
- The following illustrations are for your reference only. The location and available input and output jacks may vary depending on the purchased model.
- The supported timing may vary by input signal. Download **Resolution file** from the website (see Product support on page 3). Refer to "**Preset display modes**" in **Resolution file** for more information.

Avoid finger pressure on the screen surface.

Never stand your monitor on a desk or floor without its stand arm and base. The controls on the bottom of the front bezel are not designed to hold the weight of the monitor and may be damaged.

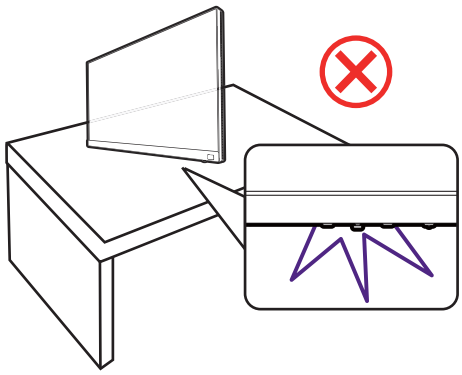

1. Attach the monitor base.

Please be careful to prevent damage to the monitor. Placing the screen surface on an object like a stapler or a mouse will crack the glass or damage the LCD substrate voiding your warranty. Sliding or scraping the monitor around on your desk will scratch or damage the monitor surround and controls.

Protect the monitor and screen by clearing a flat open area on your desk and placing a soft item like the monitor packaging bag on the desk for padding.

Gently lay the screen face up on a flat clean padded surface so you can follow the instructions printed on the quick start guide.

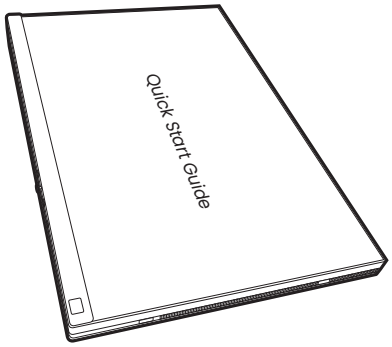

Attach the monitor stand to the monitor base as illustrated.

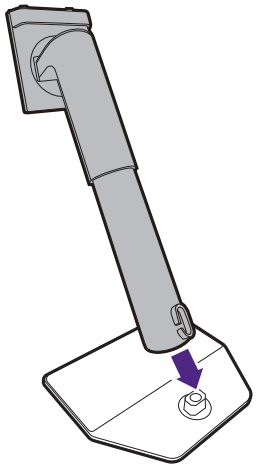

Raise the thumbscrew lid on the bottom of the monitor stand and tighten the thumbscrew as illustrated.

Push the lid back.

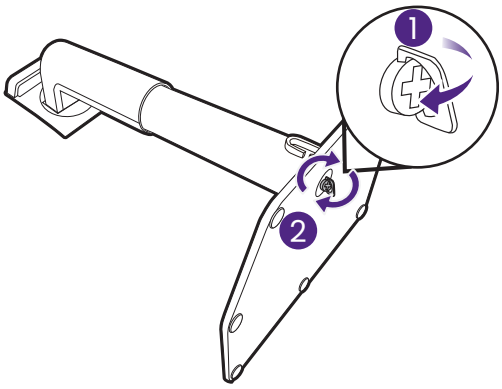

Gently turn the screen over to install the monitor stand arm and base.

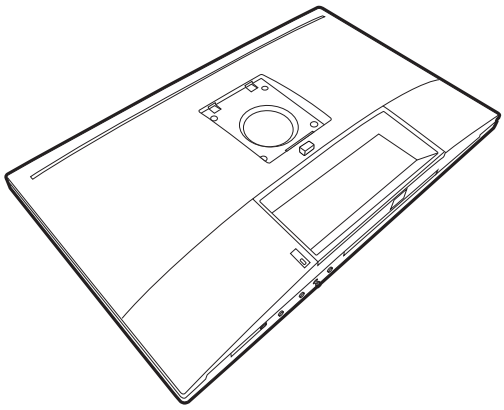

Orient and align the stand arm with the monitor (1), push them together until they click and lock into place (2).

Gently attempt to pull them back apart to check that they have properly engaged.

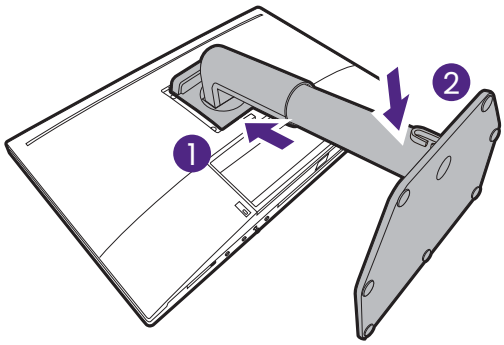

Carefully lift the monitor, turn it over and place it upright on its stand on a flat even surface. Always hold the monitor from its handle.

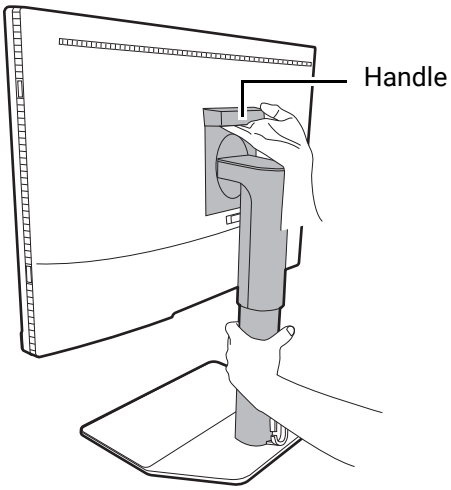

Do not hold the monitor from the upper part of the stand arm, as your finger may touch the release button and release the monitor by accident.

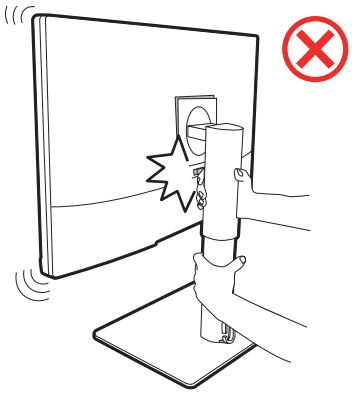

The cable management hole (varies by model) is designed to route the cables and cannot support the weight of the monitor. Never try to lift the monitor by the cable management hole.

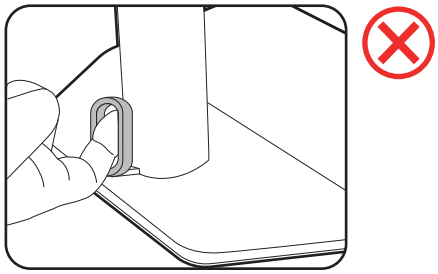

2. Connect the PC video cable

The video cables included in your package and the socket illustrations on the right may vary depending on the product supplied for your region.

1. Establish a video cable connection.
   - Connect the plug of the HDMI cable to the HDMI port on the monitor.
   - Connect the plug of the DP cable to the monitor video socket.
   - Connect the plug of the supplied USB-C™ cable to the USB-C™ port on the monitor.

SW272

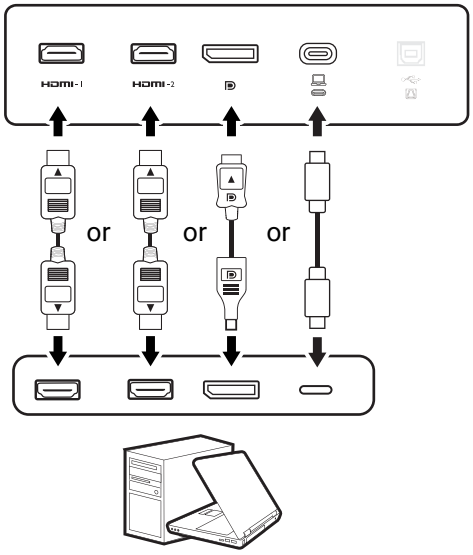

SW242

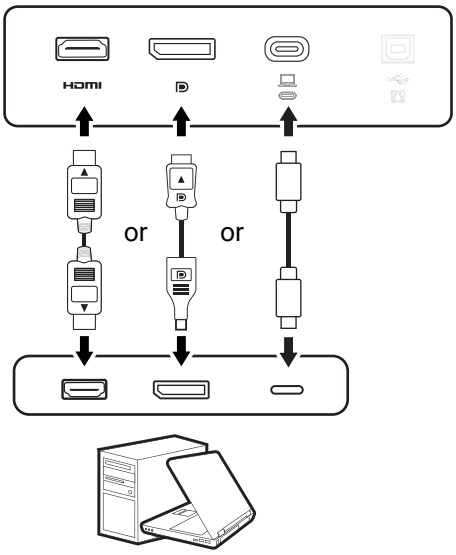

2. Connect the other end of the video cable to an appropriate port of a digital output source (e.g., a computer).

(DP input only) After the monitor and the computer are powered on, if the image is not displayed, disconnect the DP cable. Connect the monitor to any video source other than DP first. Go to **System** and **DP** on the OSD menu of the monitor and change the setting from **1.4** to **1.1**. Once the setting is done, unplug the current video cable and re-connect the DP cable. To go to the OSD menu, see 5-way controller and basic menu operations on page 44.

To keep the monitor stable, hold the top when connecting/disconnecting cables.

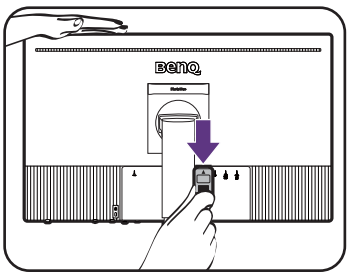

3. Connect the headphone.

You may connect the headphones to the headphone jack.

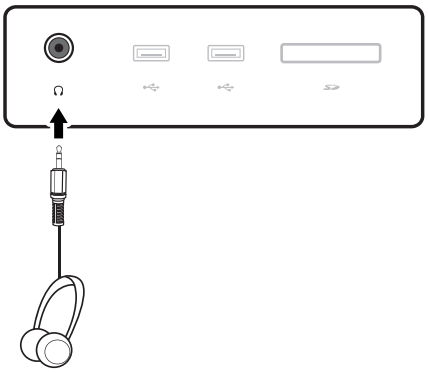

4. Connect the USB devices.

1. Connect the USB cable between the PC and the monitor (via the upstream USB port). This upstream USB port transmits data between the PC and the USB devices connected to the monitor. Note that this step is not required if the video source is from the USB-C™ input.
2. Connect the USB devices via other USB ports (downstream) on the monitor. These downstream USB ports transmit data between the connected USB devices and the upstream port.

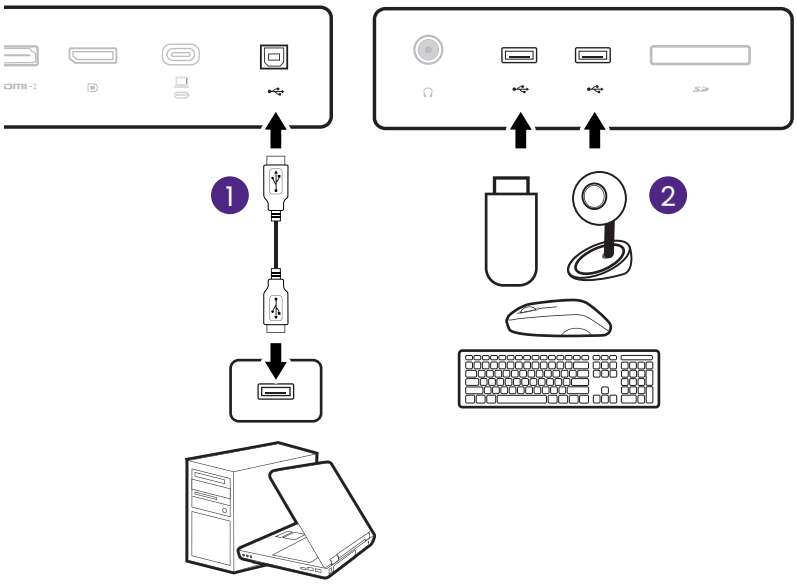

The USB-C™ port on the monitor supports power delivery. See Power delivery of USB-C™ port on your monitor on page 22 for more information. If a separately purchased USB-C™ cable is used, make sure the cable is certified by USB-IF and is full-featured, with power delivery and video / audio / data transfer functions.

Due to USB-C™ technology limitation, the USB transmission speed is determined only by the selected refresh rate. See USB-C Configuration on page 67 for more information.

5. Connect the memory card.

Insert an SD or MMC memory card following the direction indicated on the card to exchange files.

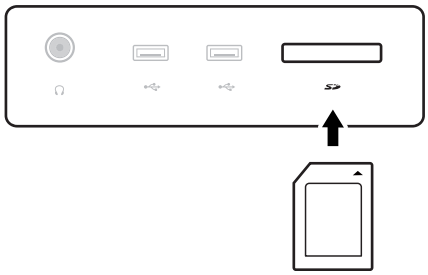

Supported memory card formats are as follows:
- SD / SDHC / SDXC
- MMC

6. Place the Hotkey Puck G3 in front of the monitor.

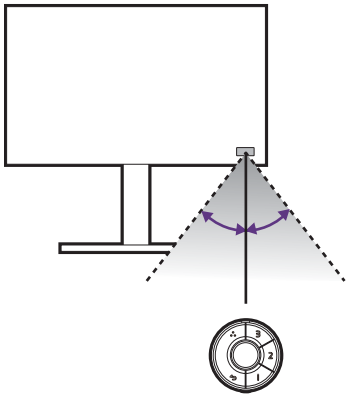

Applicable for models with Hotkey Puck G3.

If you tend to control your monitor by the Hotkey Puck G3, simply place it within the effective range as illustrated in Hotkey Puck G3 and its effective range on page 46. The Hotkey Puck G3 has been paired with your monitor and is ready for use.

7. Connect the power cable to the monitor.

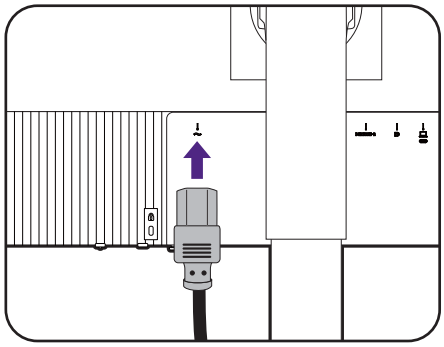

Plug one end of the power cord into the socket labelled ~ on the rear of the monitor. Do not connect the other end to a power outlet just yet.

8. Organize the cables.

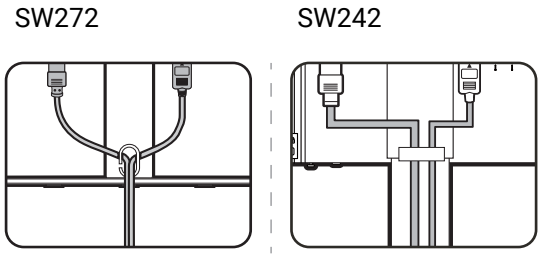

Route the cables via the cable management hole.

The way to route cables may vary by model.

9. Remove the quick start guide from the screen surface.

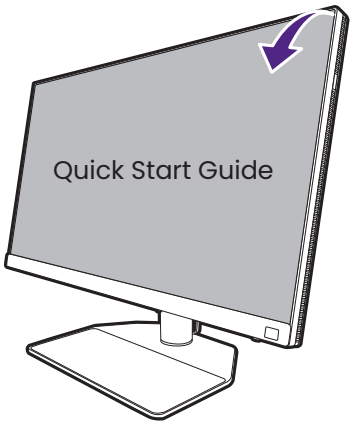

You should position the monitor and angle the screen to minimize unwanted reflections from other light sources.

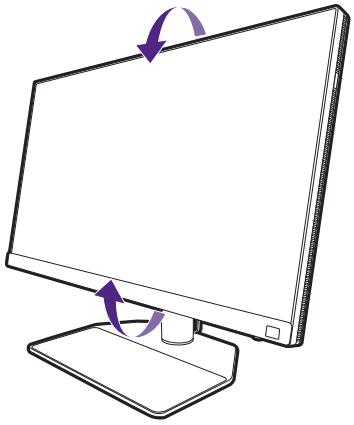

You can place devices on the monitor base as its surface is antiskid. The devices on the monitor base is for illustration only and are not provided with the product.

Remove these devices before monitor pivot or height adjustment.

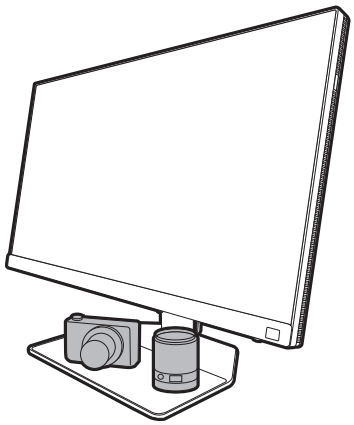

10.Connect-to and turn-on the power.

Plug the other end of the power cord into a power outlet and turn it on.

Picture may differ from product supplied for your region.

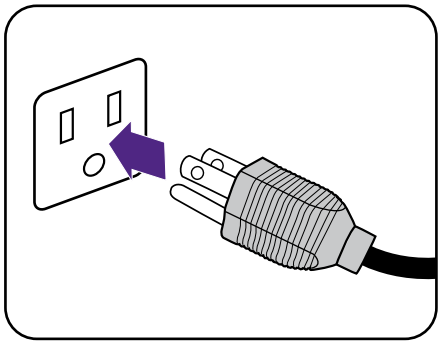

Turn on the monitor by pressing the power button on the monitor.

Turn on the computer too.

To extend the service life of the product, we recommend that you use your computer's power management function.

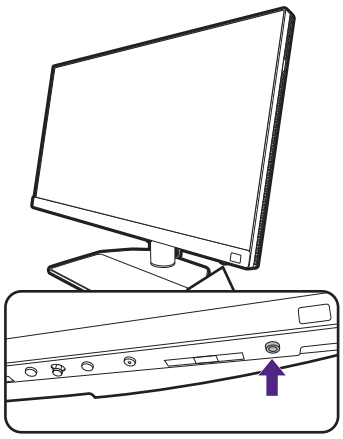

11. (SW272 only) Read the monitor update notice and follow the instructions. (Available by region.)

Your monitor settings are mandatory settings to keep low power consumption to meet the international standards.

For best performance, download BenQ **Display QuicKit** from Support.BenQ.com and update your monitor to the latest firmware.

How-to video
Display QuicKit

How to detach the stand and the base

1. Prepare the monitor and area.

Turn off the monitor and the power before unplugging the power cable. Turn off the computer before unplugging the monitor signal cable.

Protect the monitor and screen by clearing a flat open area on your desk and placing a soft item like a towel on the desk for padding, before laying the screen face down on a flat clean padded surface.

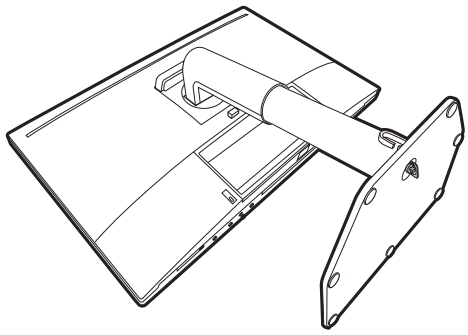

Please be careful to prevent damage to the monitor. Placing the screen surface on an object like a stapler or a mouse will crack the glass or damage the LCD substrate voiding your warranty. Sliding or scraping the monitor around on your desk will scratch or damage the monitor surround and controls.

2. Remove the monitor stand.

While pressing and holding the quick release button (❶), detach the stand from the monitor (❷).

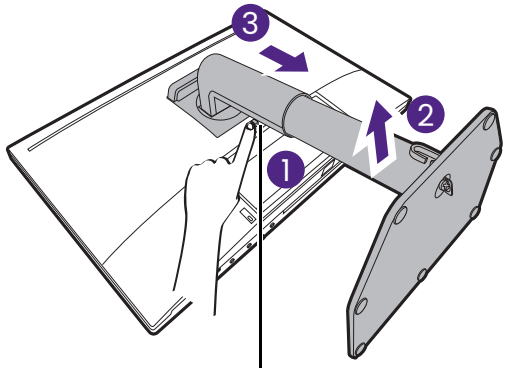

Release button

3. Remove the monitor base.

Release the thumbscrew on the bottom of the monitor base.

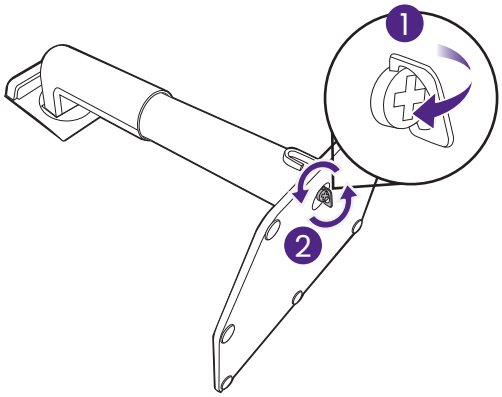

And then detach the base from the stand.

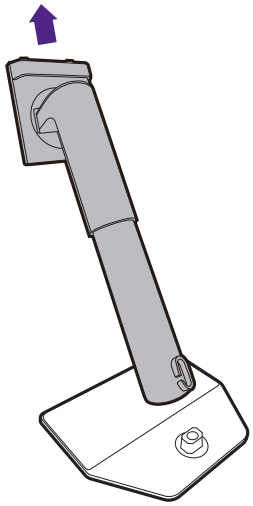

Installing shading hood (optional step)

To prevent glare or most of unwanted reflections from other light sources off your screen, you can install the shading hood (provided or purchased separately, depending on the product supplied for your region).

- Some models may come without any shading hood or with shading hood for landscape installation only. Check the package contents of the purchased model.
- (SW242 only) You can purchase shading hoods separately. Visit www.BenQ.com for the availability of SH242.
- (SW272 only) If you want to work with more than one hooded monitor, check out shading hood bridge (HB27) from BenQ website: www.BenQ.com > **HB27**.

More about HB27

- Please be careful to prevent damage to the shading hood and the monitor. Different pieces of shading hood are well-designed and can fit into your monitor properly. Do not use excessive force when installing the shading hood to avoid possible damage.
- Avoid finger pressure on the screen surface.

You can find the carved arrows on the inner side of some plates. Refer to the installation requirements and the printed marks to prepare the plates needed for landscape and portrait installation separately.

Landscape installation

Plates required for landscape installation:

top plate

1. Prepare for the shading hood installation.

Place the monitor upright on its stand on a flat even surface. Make sure the monitor is rotated to the landscape mode.

Follow the illustrations to complete the installation carefully.

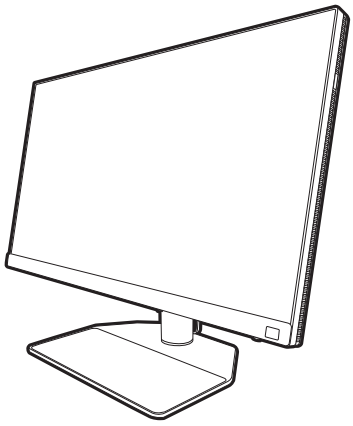

2. Install the right hoods.

Align the arrow on plate (Rt) with the one on plate (R2) and attach them together. Slide plate (Rt) to the end as illustrated.

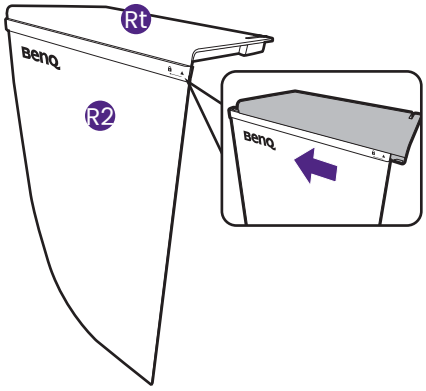

3. Attach to the right side of the monitor.

Align the hooks on the hood (plate R2) with the holes on the right side of the monitor, and insert the hooks. After that, press down plate (Rt) to fix it firmly.

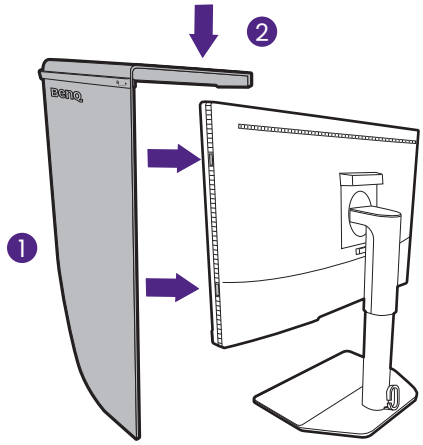

4. Install the left hoods.

Align the arrow on plate (Lt) with the one on plate (L2) and attach them together. Slide plate (Lt) to the end as illustrated.

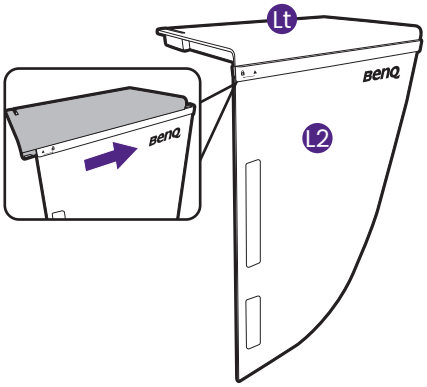

5. Attach to the left side of the monitor.

Align the hooks on the hood (plate L2) with the holes on the left side of the monitor, and insert the hooks. After that, press down plate (Lt) to fix it firmly.

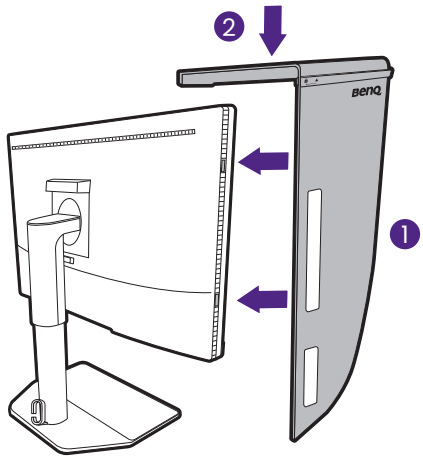

6. Install the top plate.

Hook the top plate on plate (R2) and plate (L2) as illustrated, and insert the top plate to the notch on the top of the other plates.

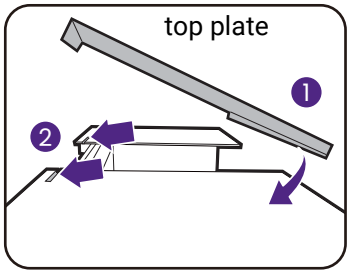

7. If you want to calibrate the display's color by a calibrator, slide to open the cover on the top plate so the calibrator can be installed.

Follow the instruction manuals of the calibrator you purchased and the provided software (e.g., **Palette Master Ultimate**) to complete the installation and calibration process.

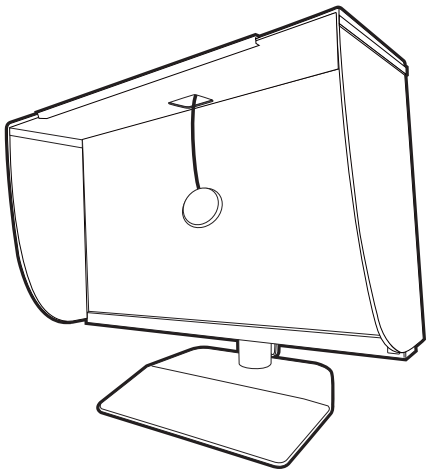

Portrait installation

Plates required for portrait installation:

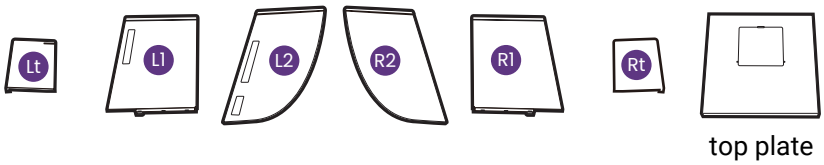

Some models may come with shading hood for landscape installation only. Check the package contents of the purchased model.

1. Prepare for the shading hood installation.

Place the monitor upright on its stand on a flat even surface. Make sure the monitor is rotated to the portrait mode as instructed in Rotating the monitor on page 39.

Follow the illustrations to complete the installation carefully.

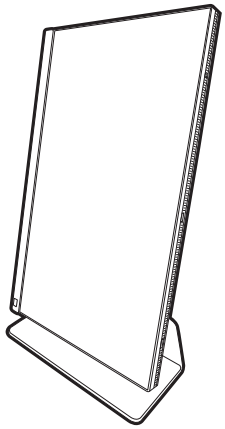

2. Install the right hoods.

Align the arrow on plate (R1) with the one on plate (R2) and attach them together. Slide plate (R2) to the end as illustrated.

Align the arrow on plate (Rt) with the one on plate (R1) and attach them together. Slide plate (R1) along with plate (R2) to the end as illustrated.

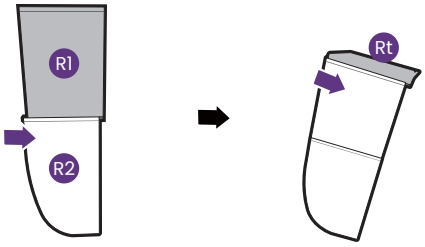

3. Attach to the right side of the monitor.

Align the hooks on the hood with the holes on the right side of the monitor, and insert the hooks. After that, press down plate (Rt) to fix it firmly.

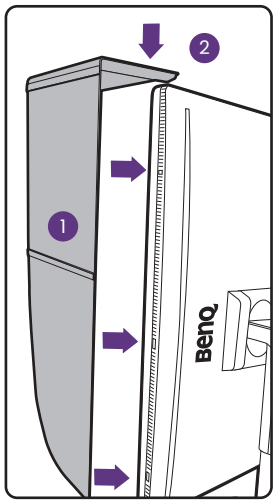

4. Install the left hoods.

Align the arrow on plate (L1) with the one on plate (L2) and attach them together. Slide plate (L2) to the end as illustrated.

Align the arrow on plate (Lt) with the one on plate (L1) and attach them together. Slide plate (L1) along with plate (L2) to the end as illustrated.

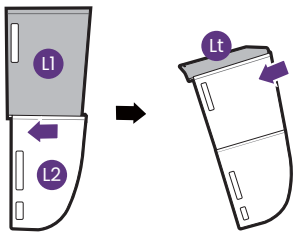

5. Attach to the left side of the monitor.

Align the hooks on the hood with the holes on the left side of the monitor, and insert the hooks. After that, press down plate (Lt) to fix it firmly.

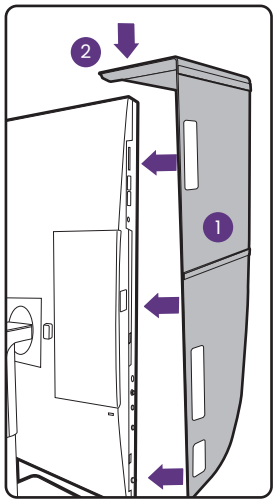

6. Install the top plate.

Hook the top plate on plate (R2) and plate (L2) as illustrated, and the top plate to the notch on the top of the other plates.

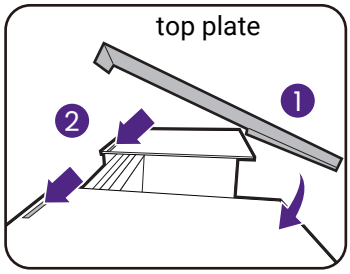

7. If you want to calibrate the display's color by a calibrator, slide to open the cover on the top plate so the calibrator can be installed.

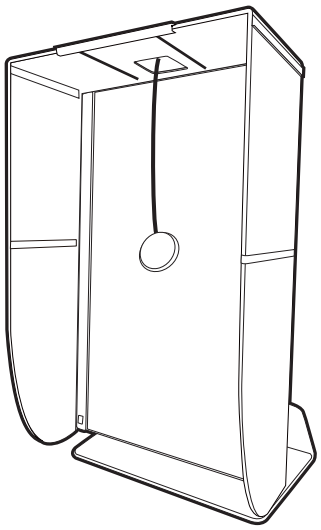

Follow the instruction manuals of the calibrator you purchased and the provided software (e.g., **Palette Master Ultimate**) to complete the installation and calibration process.

Adjusting the monitor height

To adjust the monitor height, hold both the left and the right sides of the monitor to lower the monitor or lift it up to the desired height.

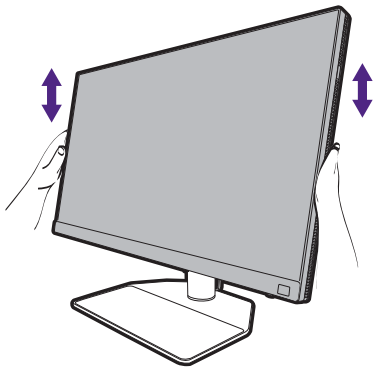

- Avoid placing hands on the upper or lower part of the height-adjustable stand or at the bottom of the monitor, as ascending or descending monitor might cause personal injuries. Keep children out of reach of the monitor while performing this operation.

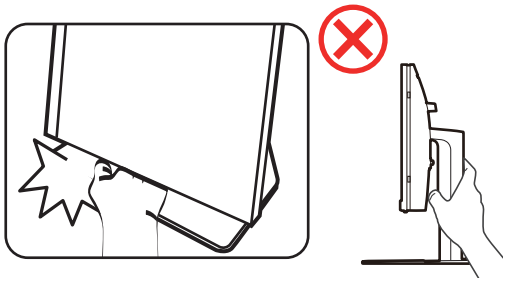

- If the monitor has been rotated to portrait mode and height adjustment is desired, you should be noted that the wide screen will keep the monitor from being lowered to its minimum height.

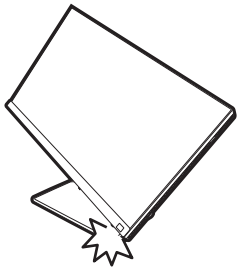

Rotating the monitor

Rotate the monitor before installing the shading hood. See Portrait installation on page 36 for more information.

1. Pivot the OSD menu.

Go to **System** > **Auto Pivot** > **ON** to rotate the OSD menu automatically as the monitor is rotated. See Auto Pivot on page 68 for more information.

2. Pivot the display.

Before rotating the monitor with a portrait viewing orientation, the display has to be rotated 90 degrees.

Right-click the desktop and select **Screen resolution** from the popup menu. Select **Portrait** in **Orientation**, and apply the setting.

Depending on the operating system on your PC, different procedures should be followed to adjust the screen orientation. Refer to the help document of your operating system for details.

3. Fully extend the monitor and tilt it.

Gently lift the display up and extend it to the maximum extended position. Then tilt the monitor.

The monitor should be vertically extended to allow to rotate from landscape to portrait mode.

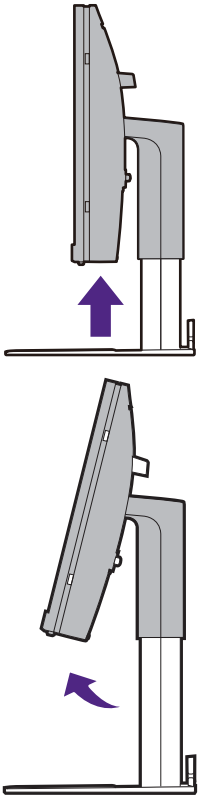

4. Rotate the monitor 90 degrees clockwise as illustrated.

To avoid the edge of the LCD display hitting the monitor base surface while it is being rotated, do tilt and extend the monitor to the highest position before you start to rotate the display. You should also make sure there are no obstacles around the monitor and there is enough room for cables. Remove the items placed on the monitor base, the connected USB peripherals and cables first.

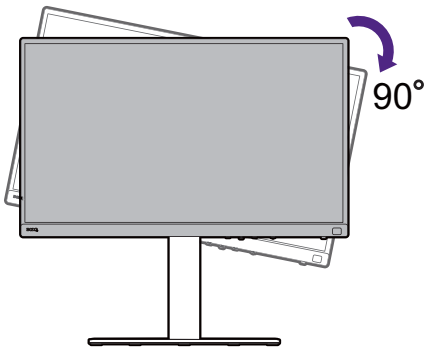

5. Adjust the monitor to the desired viewing angle.

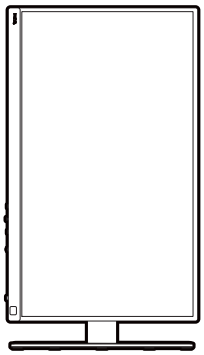

Viewing angle adjustment

You may position the screen to the desired angle with monitor tilt, swivel, and height adjustment functions. Check the product specifications on the website for details.

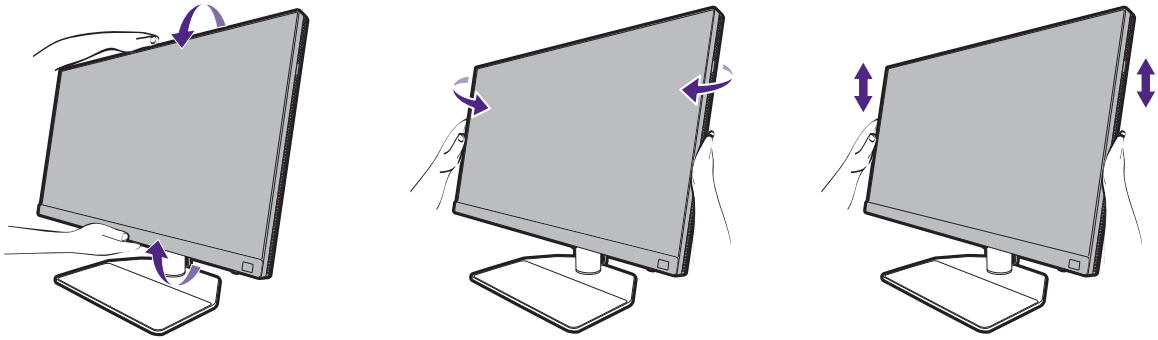

Using the monitor wall mounting kit (purchased separately)

The back of your LCD monitor has a VESA standard mount with 100mm pattern, allowing the installation of a wall mount bracket. Before starting to install a monitor wall mounting kit, please read the precautions carefully.

Precautions

- Install your monitor and monitor mounting kit on a wall with flat surface.
- Ensure that the wall material and the standard wall mount bracket (purchased separately) are stable enough to support the weight of the monitor. Refer to the product specifications on the website for weight information.
- Turn off the monitor and the power before disconnecting the cables from the LCD monitor.

1. Remove the monitor stand.

Lay the screen face down on a clean and well-padded surface. Detach the monitor stand as instructed in step 1~2 in How to detach the stand and the base on page 32.

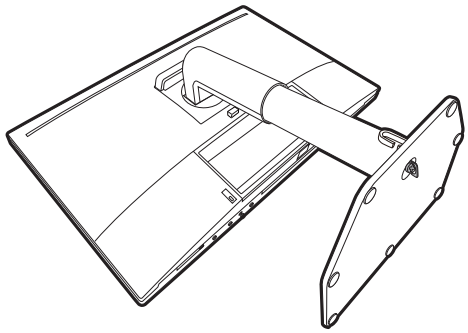

2. Remove the screws on the back cover.

Use a cross-pointed screwdriver to release the screws on the back cover. The use of a magnetic-head screwdriver is recommended to avoid of losing the screws.

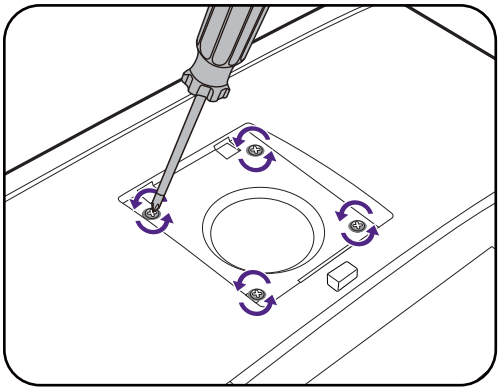

In case you intend to use your monitor on the stand in the future, please keep the monitor base, monitor stand, and screws somewhere safe for future use.

3. Follow the instruction manuals of the wall mount bracket you purchased to complete the installation.

Use four M4 x 10 mm screws to fix a VESA standard wall mount bracket to the monitor. Make sure that all screws are tightened and secured properly. Consult a professional technician or BenQ service for wall mount installation and safety precautions.

How to adjust your monitor

The control panel

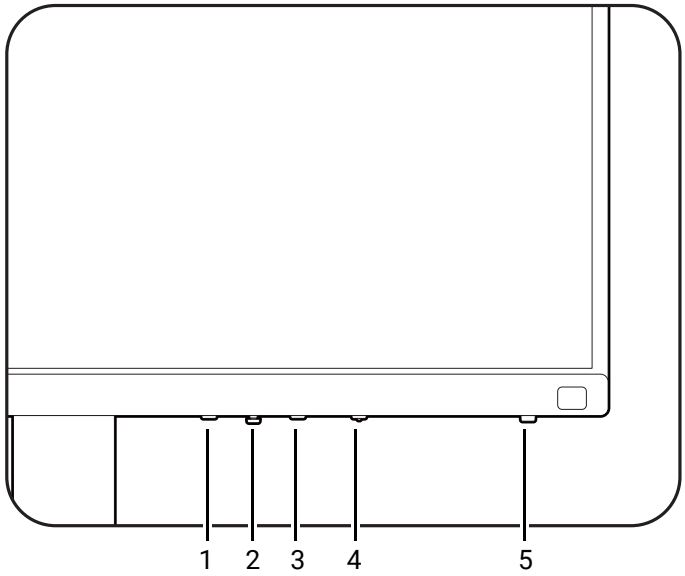

No.	Name	Description
1.	Exit key	Exits OSD menu.
2.	5-way controller	Accesses the functions or menu items as instructed by the on-screen icons. See 5-way controller and basic menu operations on page 44 for more information.
3.	Function key	• By default, the key is the hot key for **Color Mode**. Press to bring up a list of **Color Mode** options. • Press and hold for 3 seconds to access the Function Key setting menu. See Customizing the Function Key on page 45 for more information.
4.	Information key	Brings up the short **Information** menu. See Viewing the current display settings on page 53 for more information.
5.	Power key	Turns the power on or off.

5-way controller and basic menu operations

The 5-way controller is located below the lower part of the front bezel. While sitting in front of the monitor, move the controller to the directions instructed by the on-screen icons for menu navigation and operations.

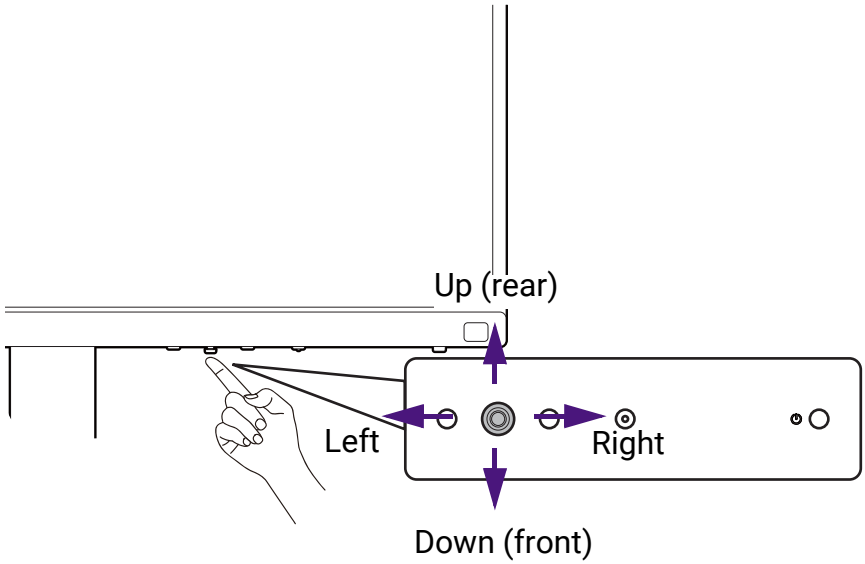

OSD icon	5-way controller operation	Function
(When no menu has been activated)		
N/A	Press the 5-way controller	Activates the main menu.
(When a menu has been activated)		
	Press	Confirms the selection.
	Move to the right	• Enters sub menus. • Confirms the selection.
	Move up	• Goes to the previous menu item. • For up / increase adjustment.
	Move down	• Goes to the next menu item. • For down / decrease adjustment.
	Move to the left	• Returns to the previous menu. • Exits OSD menu.

All OSD (On Screen Display) menus can be accessed by the control keys. You can use the OSD menu to adjust all the settings on your monitor. Available menu options may vary depending on the input sources, functions and settings.

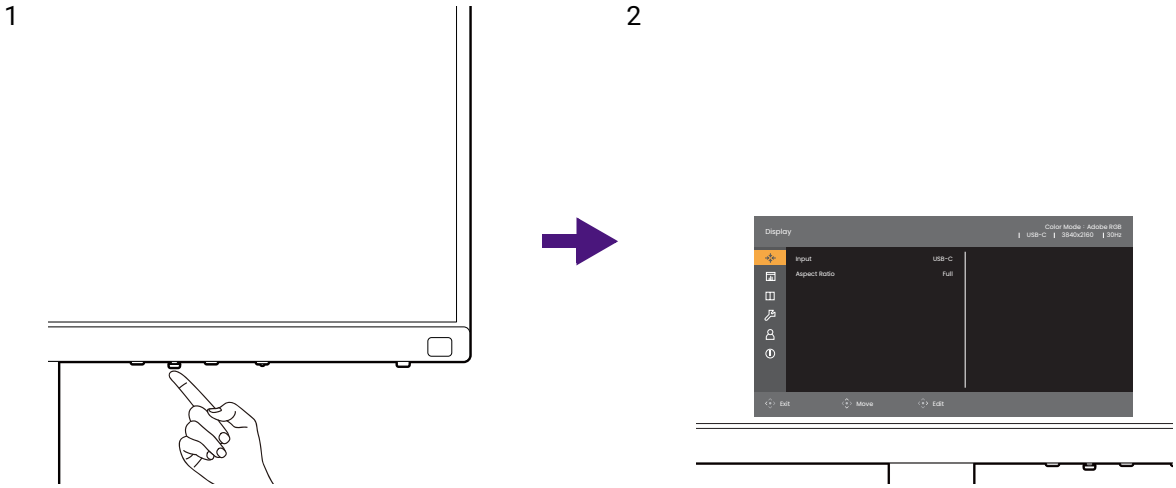

1. Press the 5-way controller.
2. The main menu is displayed.
3. On the main menu, follow the on-screen icons on the bottom of the menu to make adjustments or selection. See Navigating the main menu on page 55 for details on the menu options.

Customizing the Function Key

1. Press and hold the Function Key for 3 seconds until the **Monitor Function Key** setup menu is displayed.
2. In the sub menu, select a function that can be accessed by this key. A pop-up message will appear, showing that the setup is complete.

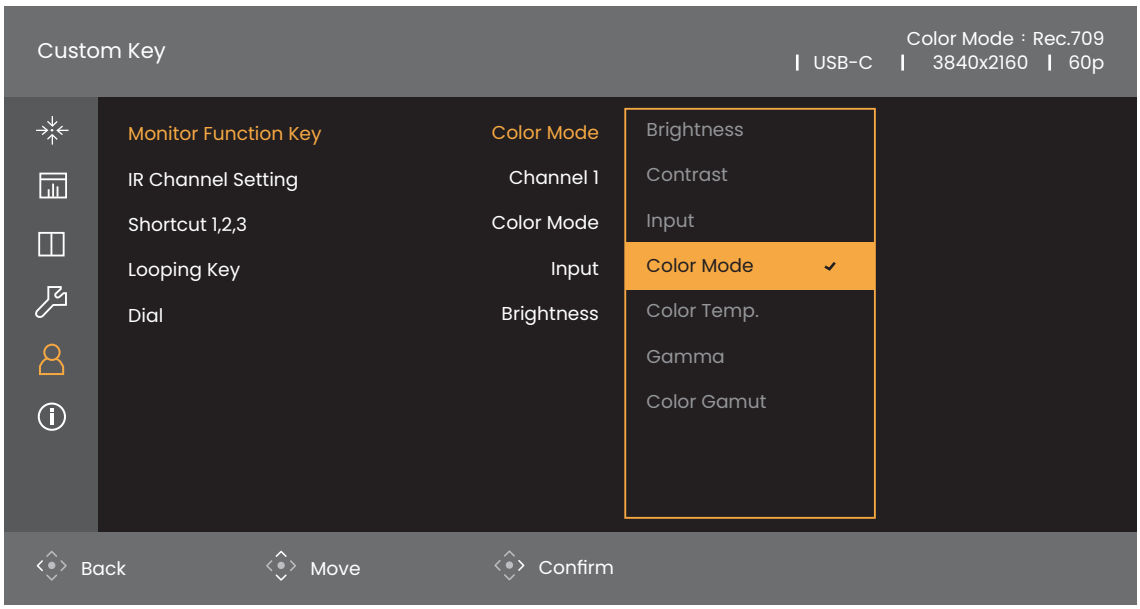

(Applicable for models with Hotkey Puck G3)
Apart from the control keys on the monitor, the Shortcut key 1/2/3 on the Hotkey Puck G3 work as hot keys as well. Press and hold one of the Shortcut keys (1/2/3) for 3 seconds to bring up a list of options, select another feature of setup menu by pressing or , and confirm with . See Customizing your Hotkey Puck G3 on page 48 for more information.

Hotkey Puck G3 and its effective range

Applicable for models with Hotkey Puck G3.

1. Follow the instructions in Installing the batteries to Hotkey Puck G3 on page 23 to get the Hotkey Puck G3 ready.
2. Place the Hotkey Puck G3 in front of the monitor. The IR sensor is located on the lower right corner of the monitor with a range of 6 meters approximately at different vertical and horizontal reception angles as illustrated. Place the Hotkey Puck G3 within the effective range to obtain the best performance.
3. To operate with the Hotkey Puck G3, see Hotkey Puck G3 and its basic operations on page 46 for more information.

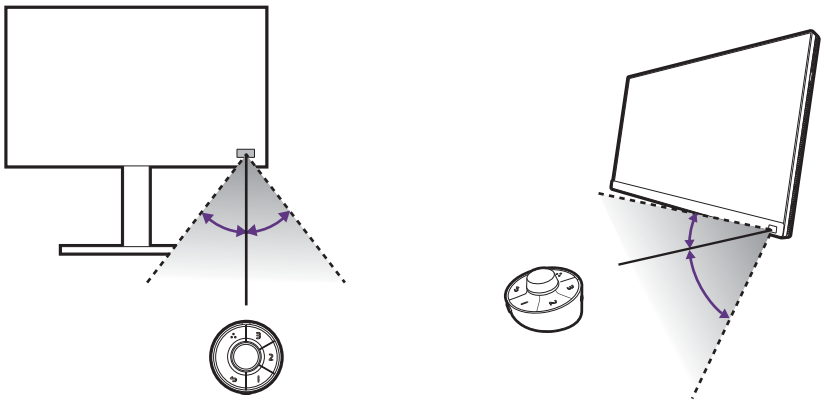

Hotkey Puck G3 and its basic operations

Apart from the control keys, Hotkey Puck G3 also provides a quick way to control and access the OSD menu.

Hotkey Puck G3 is designed for BenQ LCD Monitor exclusively and is available for compatible models only. Use it with the bundled monitors only.

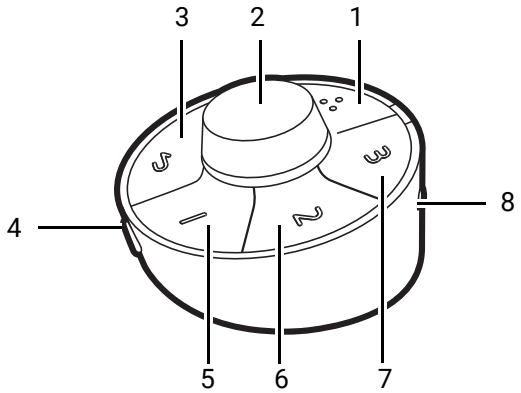

No.	Name	Description
1	Looping key	• Press repeatedly to cycle through available settings. • Press and hold for 3 seconds to bring up the setup menu to change the default setting. Alternatively, go to **Custom Key** > **Looping Key** on the monitor. See Customizing your Hotkey Puck G3 on page 48.

No.	Name	Description
2	Dial key	(If no menu is displayed) • Turn right or left to adjust **Brightness** by default. To change the default settings, press and hold for 3 seconds to bring up the setup menu to change the default setting. Alternatively, go to **Custom Key** > **Dial** on the monitor. • Press to bring up the main menu. • Press and hold for 3 seconds to bring up the setup menu to change the default setting. Alternatively, see Customizing your Hotkey Puck G3 on page 48. • (When the monitor is turned off) Press and hold for 3 seconds to turn on the monitor. (On a menu) • Turn right to scroll down the menu. • Turn left to scroll up the menu. • Press to confirm the selection. (If a control bar is displayed) • Turn right to increase the value. • Turn left to decrease the value.
3	Exit key	• Returns to the previous menu. • Press and hold for 3 seconds to turn on/off the monitor. • Exits OSD menu.
4	Information key	Press to bring up the short **Information** menu. See Viewing the current display settings on page 53 for more information.
5	Shortcut key 1	• Press to switch to **Adobe RGB** (**Color Mode**) by default. • Press and hold for 3 seconds to bring up the setup menu to change the default setting. Alternatively, see Customizing your Hotkey Puck G3 on page 48.
6	Shortcut key 2	• Press to switch to **sRGB** (**Color Mode**). • Press and hold for 3 seconds to bring up the setup menu to change the default setting. Alternatively, see Customizing your Hotkey Puck G3 on page 48.
7	Shortcut key 3	• Press to switch to **B+W** (**Color Mode**). • Press and hold for 3 seconds to bring up the setup menu to change the default setting. Alternatively, see Customizing your Hotkey Puck G3 on page 48.
8	Channel switch	Switches the Hotkey Puck G3 to work with different monitor when multiple monitors are connected. See Working with more than one monitor (IR Channel Setting) on page 51 for more information.

Customizing your Hotkey Puck G3

Keys on the Hotkey Puck G3 are designated for particular functions. You can change the default settings of the Dial key, Shortcut keys, and Looping key as desired.

1. Press the 5-way controller.
2. Go to **Custom Key** and the key you want to customize.
3. Change the function designated for it.
4. For **Shortcut 1, 2, 3**, select a category on the sub menu. Under the category, check to select up to 3 items for quick access by the selected key on Hotkey Puck G3. The numbers displayed by the chosen items refer to the Shortcut Keys that the options are assigned to.

Alternatively, press and hold a key on the Hotkey Puck G3 for 3 seconds to bring up the setup menu to change the default setting.

Working with a Mac series product

You can connect your monitor to a Mac series product. Note the compatibility is up to the performance and specifications of the Mac chip on your Mac product and may be updated without prior notice.

- When connecting your monitor to a Mac product, direct connection via Thunderbolt 3 or USB-C™ cable (if available on both Mac and the monitor) is recommended to ensure good image quality. See Connect the PC video cable on page 26 for details.
- To reduce the color difference, you are recommended to set the picture mode (color mode) of your monitor to **M-book**, **Display P3**, or **DCI-P3** mode (if available). See Color Mode on page 58 for details.
- If your monitor supports certain BenQ software, check the software webpage from www.BenQ.com to see if they work on your Mac product.

If you have any inquiries about the compatibilities with Mac products, visit Support.BenQ.com and look for related topics from **FAQ** or **Knowledge**.

Working with HDR technology

The information regarding HDR-compatible devices and content in this document is most up-to-date at the time of publication. For the latest information, contact your device manufacturer and content provider.

To enable HDR function, you need to have a compatible player and content.

1. Make sure a 4K HDR player is ready. Players with the following names and resolutions are supported.

Commonly used names for 4K (may vary by manufacturer)	4K, 4K Ultra HD, UHD, UHD 4K, Ultra HD, 2160p
Commonly used names for HDR10 (may vary by manufacturer)	HDR Premium, High Dynamic Range, HDR, Ultra HD Premium
Commonly used name for HLG (may vary by manufacturer)	Hybrid Log Gamma

2. Make sure HDR content is available.

3. Make sure the player and the monitor have been connected via an appropriate cable:
   - the provided HDMI / DP / DP to mini DP cable / USB-C™ cable (if available)
   - an HDMI cable that is HDMI High Speed or HDMI Premium certified (for models with HDMI inputs)
   - a DP / DP to mini DP cable that is DisplayPort compliance certified (for models with DP inputs)
   - a certified USB-C™ cable with DisplayPort Alternate Mode capability (for models with USB-C™ inputs)

Enabling HDR function

If the instructions in Working with HDR technology on page 48 are followed and the input content is HDR-compatible, the OSD message **HDR: On** is displayed on the screen. This means your content player and content are HDR-compatible and the HDR function is properly enabled. Depending on the input signal, the monitor detects whether it is HDR10 or HLG content and process the content properly.

If the connection is complete and no OSD message is displayed, this means the content player and/or the content are not HDR-compatible. The monitor stays to the color mode recently chosen for non-HDR content.

Adjusting the display color

To adjust the display color, you can do one of the following:

- Apply the standard color setting from **Color Adjustment** > **Color Mode**.
- Change the display and color settings manually from the related OSD menus. Depending on the **Color Mode** you just set, the available options for color adjustment may vary. Once the adjustment is done, you can save the customized settings from **Color Adjustment** > **Save Color Settings**.
- Use a compatible calibrator (purchased separately) to work with the calibration software named **Palette Master Ultimate** and optimize the display color. Visit the local website from Support.BenQ.com for software and user manual download. See Advanced software on page 3.
- Apply the calibrated results from **Color Adjustment** > **Color Mode** > calibration modes (**Calibration 1**/**Calibration 2**/**Calibration 3**).

Adjusting display mode

To display images of aspect ratio other than 16:9 or 16:10 (depending on the purchased model) and size other than the panel size of your purchased model, you can adjust the display mode on the monitor.

1. Press the 5-way controller.
2. Go to **Display** > **Aspect Ratio**.
3. Select an appropriate display mode. The setting will take effect immediately.

Choosing an appropriate color mode

Your monitor provides various color modes that are suitable for different types of images. See Color Mode on page 58 for all the available color modes.

Go to **Color Adjustment** > **Color Mode** for a desired color mode.

- Recommended mode for photo editing: **Adobe RGB**.
- Recommended modes for video editing: **Rec. 709**, **DCI-P3**, or **HDR**. To enable HDR, see Working with HDR technology on page 48.

Minimizing the color difference between the screen and the hardcopy (**Paper Color Sync**)

Your monitor features Paper Color Sync technology that helps minimize the color difference between the monitor and the hardcopy printed by the connected printer. Once the printing result is predictable on the screen, you can retouch the image efficiently.

1. Make sure the specified printer, paper, and the images are ready. Check the specifications of the software from BenQ website for the supported printers, papers, and color gamuts.
2. Download the software and user manual of **Paper Color Sync** from Support.BenQ.com. Follow the on-screen instructions to install and launch the software.
3. Configure the software settings of printer, paper, and color gamut properly.
4. After the software configuration is done, the **Color Mode** of the monitor is switched to **Paper Color Sync** automatically. You can retouch or print the images as desired.

Working with SDI devices

Your monitor is compatible with certain SDI to HDMI converters and SDI captures cards, which allows you to connect with an SDI device and view ultra HD videos on the monitor. To find out the compatible converters and capture cards, visit www.BenQ.com, find the **Overview** of your monitor model, and look for the compatibility list in the SDI feature introduction.

Working with two sets of color settings on the same image (**GamutDuo**)

GamutDuo helps improve your image editing efficiency by showing an image of two different color gamuts side-by-side. This function is available even there is only one video input.

1. Select one color mode from **Color Adjustment** > **Color Mode**.
2. Go to **GamutDuo** > **Mode** and enable this function. The screen is divided into two windows and the selected color mode is applied to the left window.
3. Go to **GamutDuo** > **Color Gamut** to select a gamut for the window on the right. You can adjust other available settings for the window on the right from **GamutDuo**.

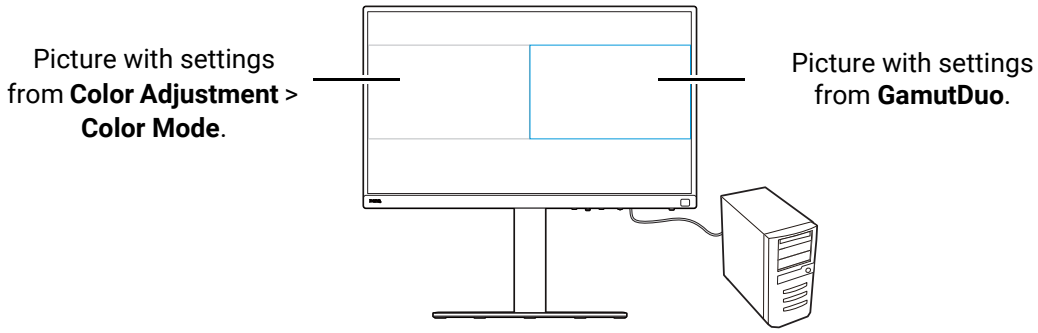

Customizing your monitor menus to work efficiently

Your monitor features different technologies to provide accurate color reproduction and various menu options to suit your possible needs. You can choose to skip some of the menu options to work efficiently with this monitor without any impact on the monitor performance.

Waking the monitor quickly from sleep mode (**Quick Awake**)

When the monitor is connected to a computer, the monitor may enter sleep mode as defined by the computer's power management plan. You can set to wake the monitor quickly from sleep mode.

1. Press the 5-way controller.
2. Go to **System** > **Quick Awake**. Select **ON**. See Quick Awake on page 66 for more information.

Scanning for inputs automatically

You can set the monitor to go through all or some input ports and scan for available inputs automatically.

1. Press the 5-way controller.
2. Go to **System** > **Auto Scan**. Select **ON**. See Auto Scan on page 67 for more information.
3. Set to skip some of the ports without connection to speed up the booting. Go to **System** > **Input Signal Skip**. Check to select ports you want to skip. You cannot disable the input in use. See Input Signal Skip on page 68 for more information.

Showing commonly used color modes on the menu (**Color Mode Skip**)

Set to show only the color modes you use frequently on the menu, so you can toggle through the options quickly.

1. Press the 5-way controller.
2. Go to **System** > **Color Mode Skip**. Check to select the color modes you want to skip. You cannot disable the color mode in use. See Color Mode Skip on page 68 for more information.

(Applicable for models with Hotkey Puck G3)
The Shortcut keys on Hotkey Puck G3 are hot keys for different color modes by default and are independent of the **Color Mode Skip** setting. If the color mode designated for one Shortcut key is disabled from **System** > **Color Mode Skip**, you can still switch to it by the Shortcut key.

Working with more than one monitor (**IR Channel Setting**)

Applicable for models with Hotkey Puck G3.

If your computer connects with more than one monitor, you can switch to different monitor quickly with your Hotkey Puck G3.

When each monitor goes with one Hotkey Puck G3

1. Set one monitor to a channel from **Custom Key** > **IR Channel Setting**. The default setting is **Channel 1**. To avoid interference, set monitors to different channels.
2. Set the channel switch on Hotkey Puck G3 to map with the monitor it goes with.
3. Control a monitor with its Hotkey Puck G3.

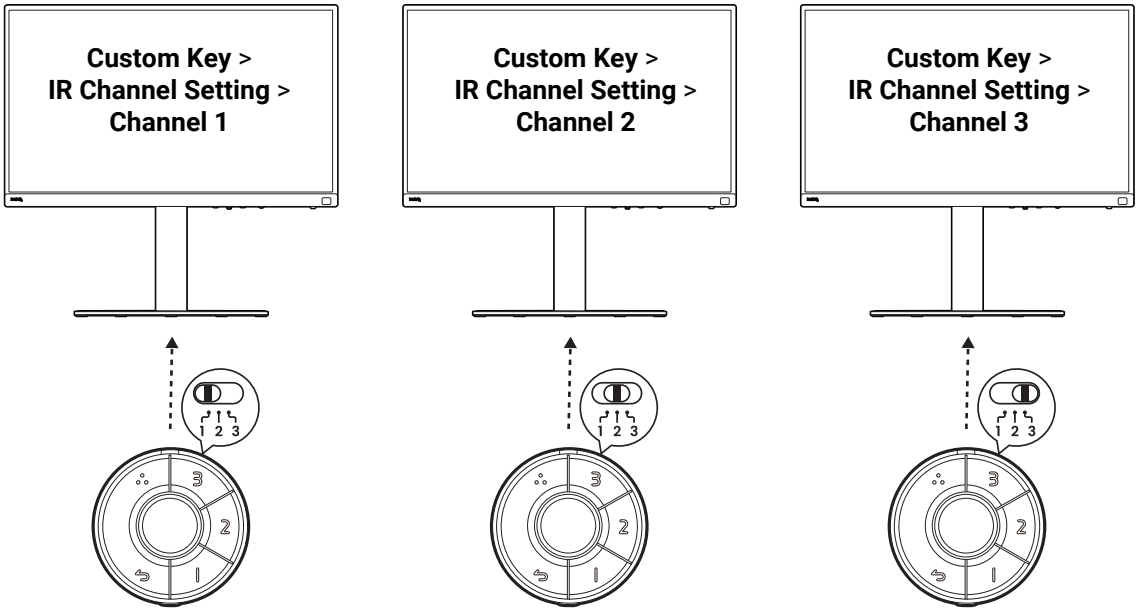

When there is only one Hotkey Puck G3

1. Set one monitor to a channel from **System** > **IR Channel Setting**.
2. Switch to the corresponding channel from the Hotkey Puck G3 when you want to control a monitor set to it.

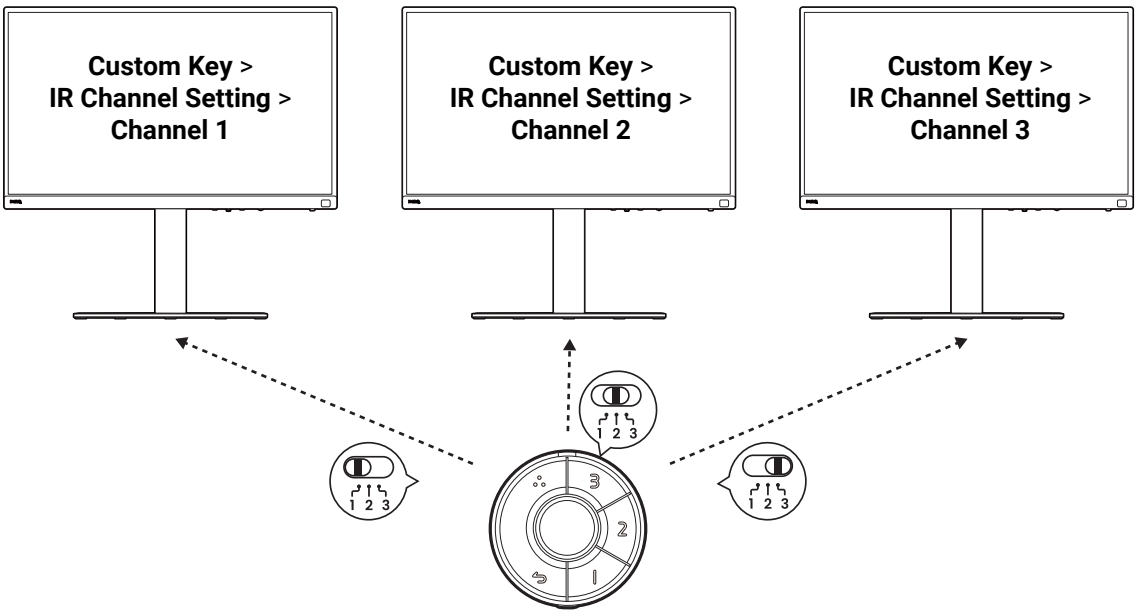

To manage color settings of more than one monitor efficiently, try Palette Master Ultimate. Visit www.BenQ.com > **Palette Master Ultimate** for more information.

Viewing the current display settings

Operations on Hotkey Puck G3 are applicable for models with Hotkey Puck G3.

As the monitor provides various feature and functions, you may have customized the monitor to suit your needs.

To find out the current display settings quickly, you can press the Information key on the monitor or on Hotkey Puck G3 to bring up the short **Information** menu.

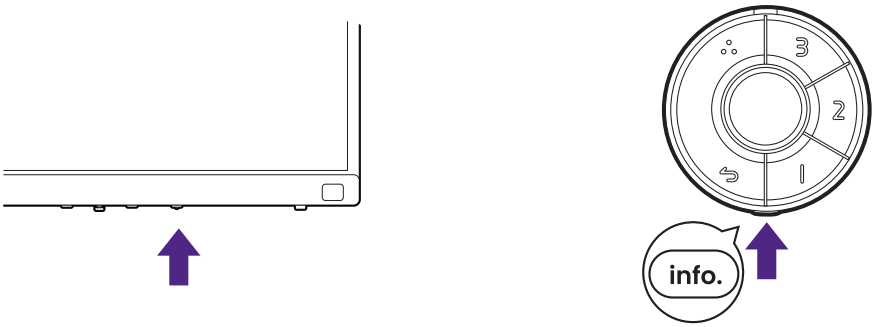

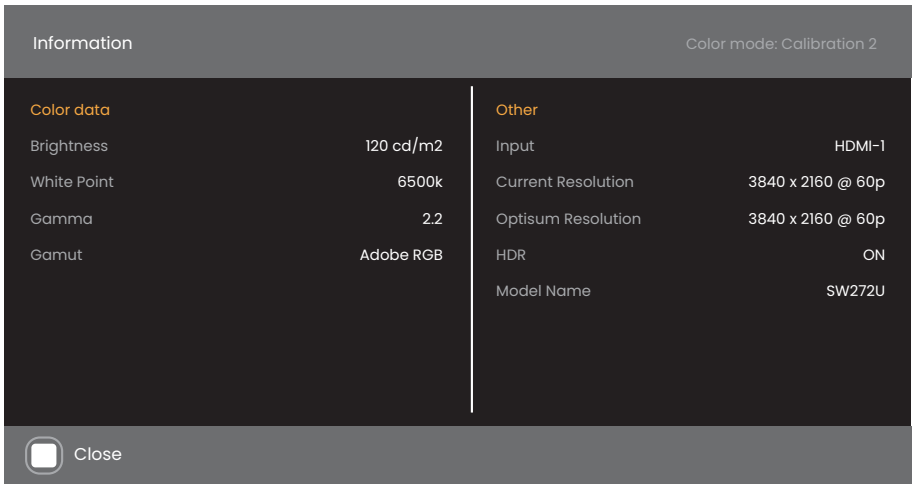

Alternatively, press the 5-way controller, and go to **Information** to view the complete monitor information.

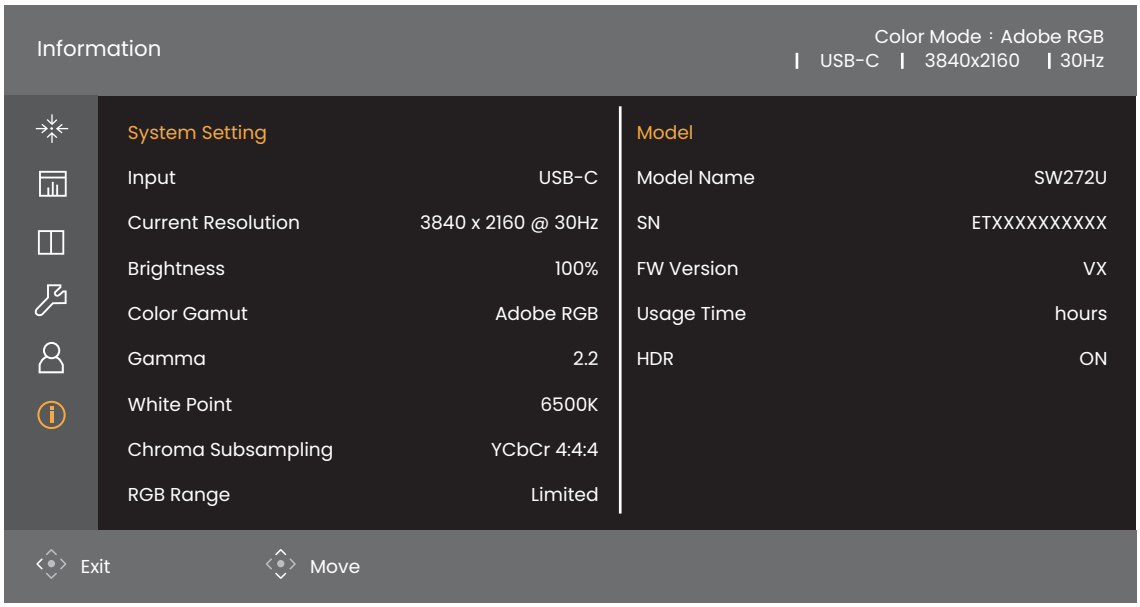

Both information menus show the current color data and monitor information and are for view only. You cannot select or change any item from **Information** menu. Available information varies.

Item	Complete Information menu (from OSD)	Short Information menu (from Information key on the monitor/Hotkey Puck G3)
Input	v	v
Current Resolution	v	v
Optimum Resolution		v
Brightness	v	v
Color Gamut	v	v
Gamma	v	v
White Point	v	v
Chroma Subsampling	v	
RGB Range	v	
Model Name	v	v
FW Version	v	
Usage Time	v	
HDR	v	v

Brightness of a calibration mode (**Calibration 1**/**Calibration 2**/**Calibration 3** from **Color Mode**) is specified by the cd/m^2 unit. Brightness percentage is provided for other color modes.

Navigating the main menu

You can use the OSD (On Screen Display) menu to adjust all the settings on your monitor. Press the 5-way controller to access the main menu. See 5-way controller and basic menu operations on page 44 for details.

Available menu options may vary depending on the input sources, functions and settings. Menu options that are not available will become grayed out. And keys that are not available will be disabled and the corresponding OSD icons will disappear. For models without certain functions, their settings and related items will not appear on the menu.

The OSD menu languages may differ from the product supplied to your region, see Language on page 66 under **System** for more details.

For more information on each menu, please refer to the following pages:

- Display menu on page 56
- Color Adjustment menu on page 58
- GamutDuo menu on page 63
- System menu on page 65
- Custom Key menu on page 70
- Information menu on page 72

Display menu

Available menu options may vary depending on the input sources, functions and settings. Menu options that are not available will become grayed out. And keys that are not available will be disabled and the corresponding OSD icons will disappear. For models without certain functions, their settings and related items will not appear on the menu.

1. Press the 5-way controller to access the main menu.
2. Use or to select **Display**.
3. Select to go to a sub menu, and then use or to select a menu item.
4. Use or to make adjustments, or use to make selection.
5. To return to the previous menu, select . To exit the menu, press the Exit key.

Item	Function	Range
Input	Use this to change the input to that appropriate to your video cable connection type.	(SW272) • **USB-C** • **DP** • **HDMI-1** • **HDMI-2** (SW242) • **USB-C** • **DP** • **HDMI**

Item	Function		Range
Aspect Ratio	This feature is provided to allow aspect ratios other than 16:9 or 16:10 (depending on the purchased model) to be displayed without geometric distortion.		
	Full	Scales the input image to fill the screen. Ideal for 16:9 or 16:10 (depending on the purchased model) aspect images.	
	Aspect	The input image is displayed without geometric distortion filling as much of the display as possible.	
	1:1	Displays the input image in its native resolution without scaling.	

Color Adjustment menu

Available menu options may vary depending on the input sources, functions and settings. Menu options that are not available will become grayed out. And keys that are not available will be disabled and the corresponding OSD icons will disappear. For models without certain functions, their settings and related items will not appear on the menu.

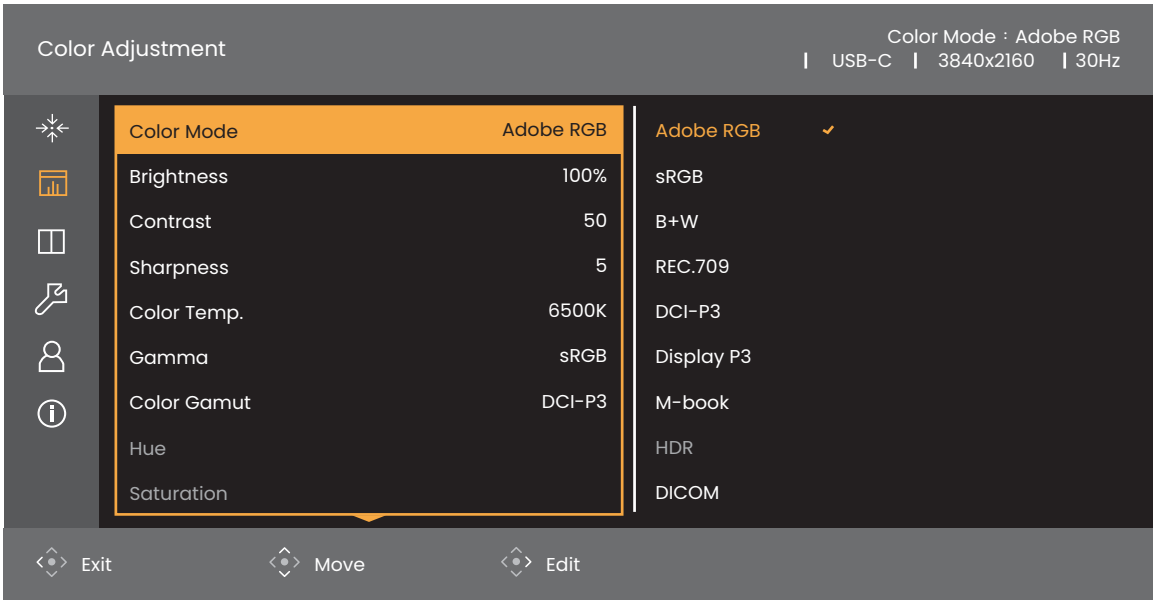

1. Press the 5-way controller to access the main menu.
2. Use or to select **Color Adjustment**.
3. Select to go to a sub menu, and then use or to select a menu item.
4. Use or to make adjustments, or use to make selection.
5. To return to the previous menu, select . To exit the menu, press the Exit key.

Item	Function		Range
Color Mode	Select a color mode that best suits the type of images shown on the screen.		
	Adobe RGB	For better color matching representation with Adobe® RGB compatible peripherals.	
	sRGB	For better color matching representation with sRGB compatible peripherals.	
	B+W	Applies a black and white theme.	• **Level 1** • **Level 2** • **Level 3**
	Rec. 709	For better color matching representation with Standard Rec. 709.	

Item	Function		Range
	DCI-P3	For better color matching representation with Standard DCI-P3.	
	Display P3	For better color matching representation with Standard Display-P3.	
	M-book	Minimizes the visual differences between the monitor and the connected MacBook series product.	
	HDR	For better color matching representation with High Dynamic Range (HDR) technology.	
	DICOM	For viewing DICOM images. It is recommended for displaying medical images. DICOM as the abbreviation of Digital Imaging and Communications in Medicine is a standard for handling, storing, printing, and transmitting medical images.	
	Paper Color Sync	Minimizes the color difference between the monitor and the hardcopy. It works with the **Paper Color Sync** software to simulate the display colors with the selected printers and paper stocks. See Minimizing the color difference between the screen and the hardcopy (Paper Color Sync) on page 50 for more information.	
	Calibration 1	Applies the calibration result optimized by the provided calibration software named **Palette Master Ultimate** and your calibrator (purchased separately). Visit the website for software download and its user manual. See Advanced software on page 3.	
	Calibration 2		
	Calibration 3		
	Custom	Applies a combination of color settings defined by users.	
Brightness	Adjusts the balance between light and dark shades.		0 to 100%
Contrast	Adjusts the degree of difference between darkness and lightness.		0 to 100
Sharpness	Adjusts the clarity and visibility of the edges of the subjects in the image.		0 to 10

Item	Function		Range
Color Temperature	**5000K**	Applies a color tint (cool or warm) to the image. Color temperature is measured in K (Kelvin) degrees. The display becomes reddish if the color temperature is low, and becomes bluish if the color temperature is high. Some color gradations may not be displayed well if this the setting has been adjusted.	
	6500K		
	9300K		
	User-K	Allows to adjust color temperature by 100K.	5000K ~ 9300K
	User-RGB	The blend of the Red, Green and Blue primary colors can be altered to change the color tint of the image. Go to the succeeding **R** (red), **G** (green), and **B** (blue) menus to change the settings. Decreasing one or more of the colors will reduce their respective influence on the color tint of the image. (e.g. if you reduce the Blue level the image will gradually take on a yellowish tint. If you reduce Green, the image will become a magenta tint.)	• **R** (0~100) • **G** (0~100) • **B** (0~100)
Gamma	Adjusts the tone luminance.		• **1.6** • **1.8** • **2.0** • **2.2** • **2.4** • **2.6** • **sRGB**
Color Gamut	**Adobe RGB**	Suitable for Adobe® RGB compatible peripherals.	
	sRGB	Suitable for sRGB compatible peripherals.	
	Rec. 709	For better color matching representation with Standard Rec. 709.	
	DCI-P3	For better color matching representation with Standard DCI-P3.	
Hue	Adjusts the degree of how we perceive colors. Some color gradations may not be displayed well if this the setting has been adjusted.		• **R** • **G** • **B** • **C** • **M** • **Y**

Item	Function	Range
Saturation	Adjusts the purity degree of colors. Some color gradations may not be displayed well if this the setting has been adjusted.	• **R** • **G** • **B** • **C** • **M** • **Y**
Black Level	Adjusts the luminance of the dark areas in an image.	0~10
Save Color Settings	Saves a new set of customized color settings.	**Custom Mode**
Reset Color	Resets the custom color settings to the factory defaults.	• **YES** • **NO**

Available menu options to each color mode

Depending on the **Color Mode** you just set, the available options for color adjustment may vary. The list is for reference only as available options may vary by input. Menu options that are not available will become grayed out.

	Settings								
Color Mode	**Brightness**	**Contrast**	**Sharpness**	**Color Temp.**	**Gamma**	**Color Gamut**	**Hue**	**Saturation**	**Black Level**
Adobe RGB	V	V	V	5000K / 6500K	2.2	Adobe RGB	N/A	N/A	V
sRGB	V	V	V	5000K / 6500K	2.2 / sRGB	sRGB	N/A	N/A	V
B+W (*)	V	V	V	N/A	N/A	N/A	N/A	N/A	N/A
Rec. 709	V	V	V	6500K	2.2 / 2.4	Rec. 709	N/A	N/A	N/A
M-book	V	V	V	N/A	N/A	N/A	N/A	N/A	N/A
DCI-P3	V	V	V	N/A	2.2 / 2.4 / 2.6	DCI-P3	N/A	N/A	N/A
Display P3	V	V	V	6500K	sRGB	DCI-P3	N/A	N/A	N/A
DICOM	V	V	V	N/A	N/A	N/A	N/A	N/A	N/A
HDR	V	V	V	N/A	N/A	N/A	N/A	V	N/A
Calibration 1	N/A	N/A	V	N/A	N/A	N/A	N/A	N/A	N/A
Calibration 2	N/A	N/A	V	N/A	N/A	N/A	N/A	N/A	N/A
Calibration 3	N/A	N/A	V	N/A	N/A	N/A	N/A	N/A	N/A
Custom	V	V	V	V	V	V	V	V	V
Paper Color Sync	N/A	N/A	N/A	N/A	N/A	N/A	N/A	N/A	N/A

- V: all options are available for adjustment.
  N/A: all options are not available for adjustment.
- *: 3 levels are provided for adjustment.

GamutDuo menu

Available menu options may vary depending on the input sources, functions and settings. Menu options that are not available will become grayed out. And keys that are not available will be disabled and the corresponding OSD icons will disappear. For models without certain functions, their settings and related items will not appear on the menu.

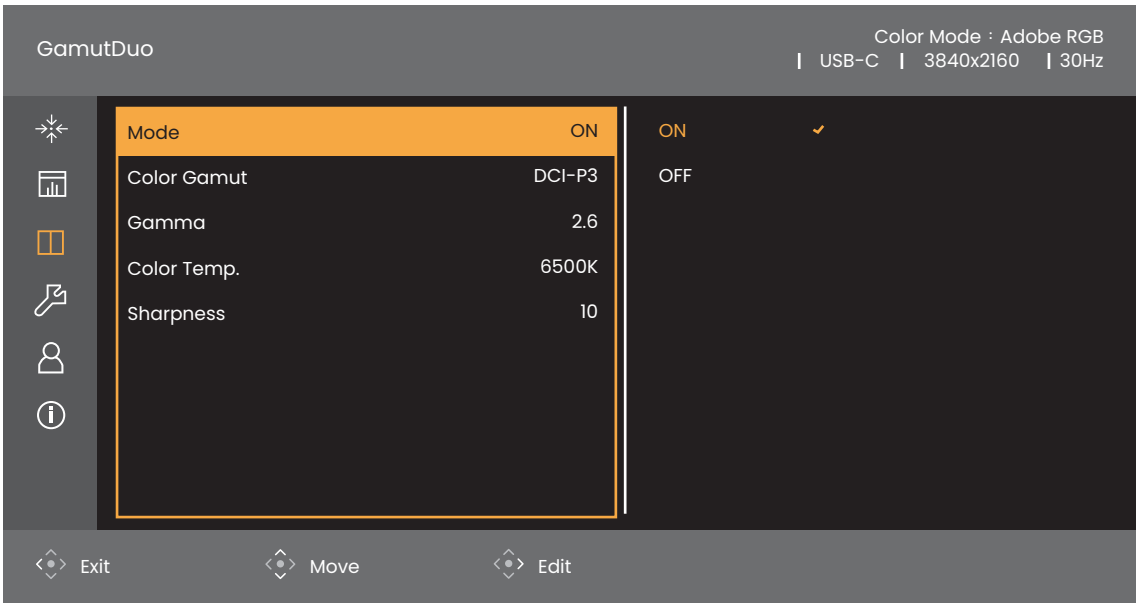

1. Press the 5-way controller to access the main menu.
2. Use or to select **GamutDuo**.
3. Select to go to a sub menu, and then use or to select a menu item.
4. Use or to make adjustments, or use to make selection.
5. To return to the previous menu, select . To exit the menu, press the Exit key.

Item	Function	Range
Mode	Sets to apply different color settings to pictures displayed side-by-side on the screen.	• **ON** • **OFF**
Color Gamut	Reproduces the color gamut set by specified standards of the window on the right.	• **Adobe RGB** • **sRGB** • **Rec. 709** • **DCI-P3** • **Display P3** (SW272 only)

Item	Function	Range
Gamma	Adjusts the tone luminance of the window on the right.	• **1.6** • **1.8** • **2.0** • **2.2** • **2.4** • **2.6** • **sRGB**
Color Temp.	Applies a color tint (cool or warm) to the image of the window on the right. Color temperature is measured in K (Kelvin) degrees. The display becomes reddish if the color temperature is low, and becomes bluish if the color temperature is high.	• **5000K** • **6500K** • **9300K**
Sharpness	Adjusts the sharpness of the window on the right. To adjust the contrast and the sharpness of the main source, go to the **Color Adjustment** menu. See page 59 for more information.	0~10

System menu

Available menu options may vary depending on the input sources, functions and settings. Menu options that are not available will become grayed out. And keys that are not available will be disabled and the corresponding OSD icons will disappear. For models without certain functions, their settings and related items will not appear on the menu.

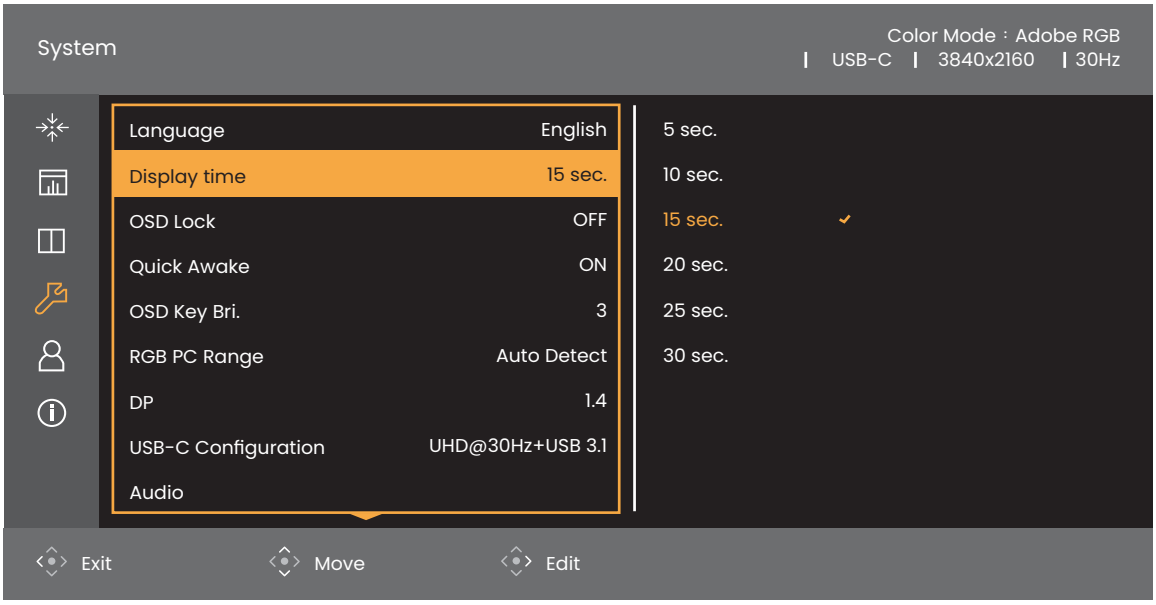

1. Press the 5-way controller to access the main menu.
2. Use or to select **System**.
3. Select to go to a sub menu, and then use or to select a menu item.
4. Use or to make adjustments, or use to make selection.
5. To return to the previous menu, select . To exit the menu, press the Exit key.

Item	Function		Range
OSD Settings	**Language**	Sets the OSD menu language. The language options displayed on your OSD may differ from those shown on the right, depending on the product supplied in your region.	• **English** • **Français** • **Deutsch** • **Italiano** • **Español** • **Polski** • **Česky** • **Magyar** • 한국어 • **Română** • **Nederlands** • **Русский** • **Svenska** • **Português** • العربية • **日本語** • **繁體中文** • **简体中文**
	Display Time	Adjusts the display time of the OSD menu.	• **5 sec.** • **10 sec.** • **15 sec.** • **20 sec.** • **25 sec.** • **30 sec.**
	OSD Lock	Prevents all the monitor settings from being accidentally changed. When this function is activated, the OSD controls and hotkey operations will be disabled. To unlock the OSD controls, press and hold any key for 10 seconds.	• **OFF** • **Active**
Quick Awake	Sets to wake the monitor quickly from standby mode. **ON**: You can wake the monitor quickly from standby mode. The monitor keeps supplying power to the USB-C™ port while the monitor is in standby mode. **OFF**: It takes a little more time to wake the monitor from standby mode. When this function is disabled, the USB-C™ port is not supplied with power while the monitor is in standby mode.		
OSD Key Bri.	Adjusts the LED indicator's brightness of the power key.		0 ~ 5

Item	Function		Range
RGB PC Range	Determines the range of color scales. Select an option that matches the RGB range setting on the connected HDMI / DP device.		• **Auto Detect** • **RGB (0~255)** • **RGB (16~235)**
DP	Selects an appropriate DP standard for data transmission.		• **1:1** • **1.4**
USB-C Configuration	Sets the refresh rate of the input video via USB-C™ port. The USB transmission speed changes accordingly due to USB-C™ technology limitation.		
	(SW272U)		
	UHD@60Hz + USB 2.0	Refresh rate: 3840 x 2160 @ 60Hz USB transmission speed: 480 Mbps	
	UHD@30Hz + USB 3.1	Refresh rate: 3840 x 2160 @ 30Hz USB transmission speed: 5 Gbps	
	(SW272Q)		
	QHD@60Hz + USB 2.0	Refresh rate: 2560 x 1440 @ 60Hz USB transmission speed: 480 Mbps	
	QHD@60Hz + USB 3.1	Refresh rate: 2560 x 1440@ 60Hz USB transmission speed: 5 Gbps	
	(SW242Q)		
	QHD@60Hz + USB 2.0	Refresh rate: 2560 x 1600 @ 60Hz USB transmission speed: 480 Mbps	
	QHD@60Hz + USB 3.1	Refresh rate: 2560 x 1600@ 60Hz USB transmission speed: 5 Gbps	
Audio	**Volume**	Adjusts the audio volume.	0~100
	Mute	Mutes the audio input.	• **ON** • **OFF**
Auto Scan	When this function is activated, all ports will be in the input auto select loop. See Scanning for inputs automatically on page 51 for more information.		• **ON** • **OFF**

Item	Function	Range
Input Signal Skip	Selects ports you want to skip in the input auto select loop See Scanning for inputs automatically on page 51 for more information.	(SW272) • **OFF** • **USB-C** • **DP** • **HDMI-1** • **HDMI-2** (SW242) • **OFF** • **USB-C** • **DP** • **HDMI**
Color Mode Skip	Selects the color modes you want to hide on the **Color Mode** menu. See Showing commonly used color modes on the menu (Color Mode Skip) on page 51 for more information.	• **OFF** • **Adobe RGB** • **sRGB** • **B+W** • **Rec. 709** • **DCI-P3** • **Display P3** • **M-book** • **HDR** • **DICOM** • **Paper Color Sync** • **Calibration 1** • **Calibration 2** • **Calibration 3** • **Custom**
AMA	Improves the gray level response time of the LCD panel.	• **ON** • **OFF**
Auto Power Off	Sets the time to power off the monitor automatically in power saving mode.	• **OFF** • **10 min** • **20 min** • **30 min**
Auto Pivot	Sets to rotate the OSD menu with the monitor.	• **ON** • **OFF**
Resolution Notice	Sets whether to display the resolution notice of the recommended resolution when a new input source is detected by the monitor.	• **ON** • **OFF**

Item	Function	Range
DDC/CI	Allows the monitor settings to be set through the software on the PC. DDC/CI, short for Display Data Channel/Command Interface, which was developed by Video Electronics Standards Association (VESA). DDC/CI capability allows monitor controls to be sent via the software for remote diagnostics.	• **ON** • **OFF**
Reset All	Resets all mode, color and geometry settings to the factory default values.	• **YES** • **NO**

Custom Key menu

Available menu options may vary depending on the input sources, functions and settings. Menu options that are not available will become grayed out. And keys that are not available will be disabled and the corresponding OSD icons will disappear. For models without certain functions, their settings and related items will not appear on the menu.

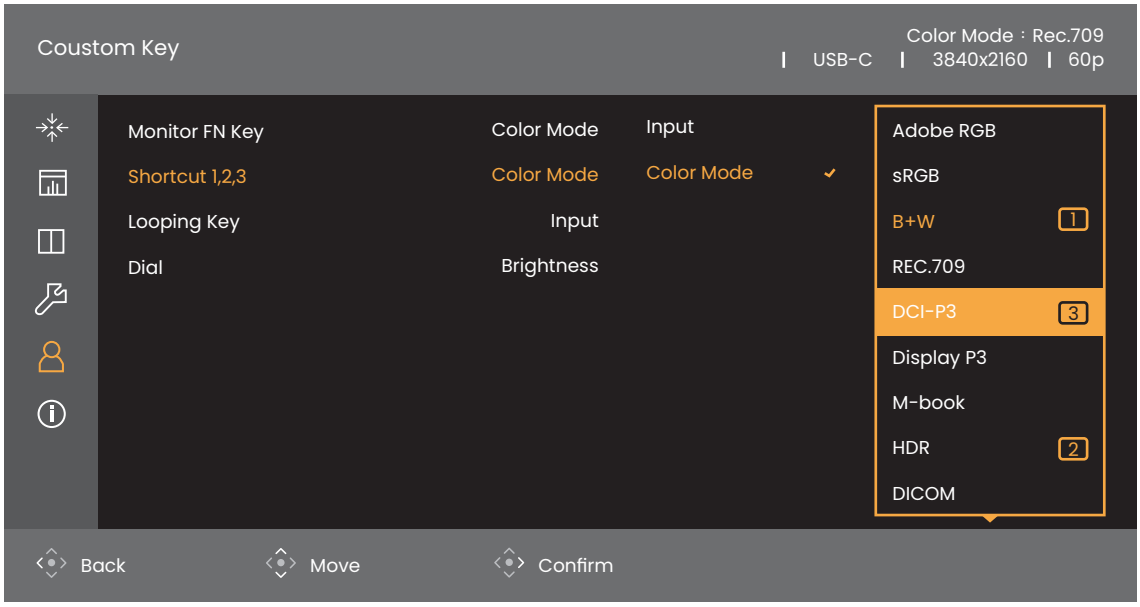

1. Press the 5-way controller to access the main menu.
2. Use or to select **Custom Key**.
3. Select to go to a sub menu, and then use or to select a menu item.
4. Use or to make adjustments, or use to make selection.
5. To return to the previous menu, select . To exit the menu, press the Exit key.

Item	Function	Range
Monitor Function Key	Sets the function to be accessed by Function key.	• **Brightness** • **Contrast** • **Input** • **Color Mode** • **Color Temp.** • **Gamma** • **Color Gamut**
(Applicable for models with Hotkey Puck G3.)		
IR Channel Setting	Sets the monitor to map with the Hotkey Puck G3 for easy OSD control. See Working with more than one monitor (IR Channel Setting) on page 51 for more information.	• **Channel 1** • **Channel 2** • **Channel 3**

Item	Function	Range
Shortcut 1, 2, 3	Sets the function to be accessed by Shortcut key 1 / 2 / 3 on Hotkey Puck G3. See Hotkey Puck G3 and its basic operations on page 46 for the location of the keys. Select a category first, and choose up to 3 options to be accessed by these keys. The numbers displayed next to the selected items are the shortcut keys that the options are designated to.	• **Color Mode** • **Input**
Looping Key	Sets the function to be accessed by the Looping key on Hotkey Puck G3. See Hotkey Puck G3 and its basic operations on page 46 for the location of the key. Select a category first, and choose up to 3 options to be accessed by this key.	• **Color Mode** • **Input** • **Mute**
Dial	Sets the function to be accessed by the Dial key on Hotkey Puck G3. See Hotkey Puck G3 and its basic operations on page 46 for the location of the key.	• **Brightness** • **Contrast** • **Volume**

Information menu

Available menu options may vary depending on the input sources, functions and settings. Menu options that are not available will become grayed out. And keys that are not available will be disabled and the corresponding OSD icons will disappear. For models without certain functions, their settings and related items will not appear on the menu.

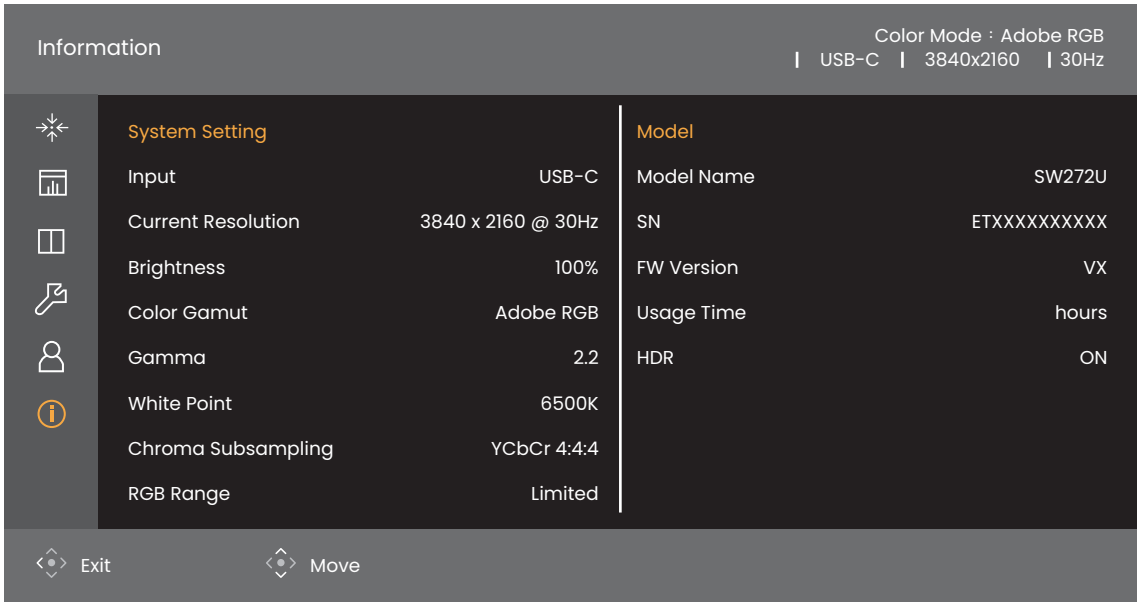

1. Press the 5-way controller to access the main menu.
2. Use ‹◆› or ‹◆› to select **Information**. See Viewing the current display settings on page 53 for more information.

Troubleshooting

Frequently asked questions (FAQ)

Imaging

The image is blurred.

- Download **Resolution file** from the website (see Product support on page 3). Refer to "**Adjusting the Screen Resolution**". And then select the correct resolution, refresh rate and make adjustments based on these instructions.
- If a VGA extension cable is used, remove the extension cable for the test. Is the image now in focus? Download **Resolution file** from the website (see Product support on page 3). Refer to "**Adjusting the Screen Resolution**". And then select the correct resolution, refresh rate and make adjustments based on these instructions to optimize the image. It is normal for blurring to occur due to conduction losses in extension cables. You can minimize these losses by using an extension cable with better conduction quality or with a built-in booster.

Does the blurring only occur at resolutions lower than the native (maximum) resolution?

Download **Resolution file** from the website (see Product support on page 3). Refer to "**Adjusting the Screen Resolution**". Select the native resolution.

Pixel errors can be seen.

One of several pixels is permanently black, one or more pixels are permanently white, one or more pixels are permanently red, green, blue or another color.

- Clean the LCD screen.
- Cycle power on-off.
- These are pixels that are permanently on or off and is a natural defect that occurs in LCD technology.

The image has a faulty coloration.

It has a yellow, blue or pink appearance.

Go to **Picture** and **Reset Color**, and then choose **YES** to reset the color settings to the factory defaults.

If the image is still not correct and the OSD also has faulty coloration, this means one of the three primary colors is missing in the signal input. Now check the signal cable connectors. If any pin is bent or broken off, please contact your dealer to get necessary support.

The image is distorted, flashes or flickers.

Download **Resolution file** from the website (see Product support on page 3). Refer to "**Adjusting the Screen Resolution**". And then select the correct resolution, refresh rate and make adjustments based on these instructions.

You are running the monitor at its native resolution, but the image is still distorted.

Images from different input sources may appear distorted or stretched on the monitor running at its native resolution. To have the optimal display performance of each type of input sources, you can use the **Display Mode** function to set a proper aspect ratio for the input sources. See Aspect Ratio on page 57 for details.

The image is displaced in one direction.

Download **Resolution file** from the website (see Product support on page 3). Refer to "**Adjusting the Screen Resolution**". And then select the correct resolution, refresh rate and make adjustments based on these instructions.

Faint shadow from the static image displayed is visible on the screen.

- Activate the power management function to let your computer and monitor go into a low power "sleep" mode when not actively in use.
- Use a screensaver to prevent the occurrence of image retention.

What are the supported video timings?

Download **Resolution file** from the website (see Product support on page 3). Refer to "**Preset display modes**" for the supported timings.

Power LED indicator

The LED indicator is solid white or flashing white.

- If the LED lights up in solid white, the monitor is powered on.
- If the LED is illuminated in white and there is a message **Out of Range** on the screen, this means you are using a display mode that this monitor does not support, please change the setting to one of the supported mode. Download **Resolution file** from the website (see Product support on page 3). Refer to "**Adjusting the Screen Resolution**". And then select the correct resolution, refresh rate and make adjustments based on these instructions.
- If the LED is illuminated in flashing white, the power management mode is active. Press any button on the computer keyboard or move the mouse. If that does not help, check the signal cable connectors. If any pin is bent or broken off, please contact your dealer to get necessary support.
- If the LED is off, check the power supply mains socket, the external power supply and the mains switch.

OSD controls

The OSD controls are inaccessible.

To unlock the OSD controls when it is preset to be locked, press and hold any key for 10 seconds.

OSD messages

A message **Out of Range** on the screen during computer boot up process.

If there is a message **Out of Range** on the screen during computer boot up process, this means computer compatibility caused by operating system or graphic card. The system will adjust the refresh rate automatically. Just wait until the operating system is launched.

Audio

No sound can be heard from the connected external speakers.

- Remove your headphone (if the headphone is connected to the monitor).
- Check whether the headphone jack is properly connected.
- If the external speakers are USB-powered, check whether the USB connection is OK.
- Increase the volume (volume may be muted or too low) on the external speakers.
- If USB-C™ connection is established, make sure the appropriate audio output setting on your laptop has been selected. You may look for options similar to "USB headphone".

HDR

There is a message **HDR: Emulated** showing on the screen.

This means the input content is not HDR-compatible and the monitor is in HDR-emulated mode. Refer to Working with HDR technology on page 48 to check if a supported player, content, and the certified cable are used.

USB-C™ connection

No video or audio output from the laptop with USB-C™ connection.

Check the cable connections and menu settings in the following order:

- Check if the USB-C™ cable has been connected to the monitor and the laptop properly. See Connect the PC video cable on page 26 for more information.
- Check if the input source has been selected to **USB-C** on **Display** > **Input**.

Need more help?

If your problems remain after checking this manual, please contact your place of purchase or visit the local website from Support.BenQ.com for more support and local customer service.