CL25-540WH1

SPECIFICATIONS

GENERAL

Max. weight	35 kg (per screen)

FUNCTIONALITY

Height adjustment	60,5-90,5 cm
Tilt (degrees)	+20°, -20°
Swivel (degrees)	+8°, -8°
Rotate (degrees)	+180°, -180°
Height	90,5 cm
Width	47 cm
Depth	47 cm
Adjustment type	Manual

INFORMATION

Color	White
Main material	Steel
Warranty	5 year
EAN code	8721246340638

*Please note: The inch sizes stated are just an indication, combined with the weight and VESA sizes. The maximum weight and VESA size are absolute restrictions for the products and should not be exceeded.

NEOMOUNTS CL25-540WH1 BEAMER CEILING

Neomounts CL25-540WH1 Beamer ceiling mount - max 35 kg - h 60,5-90,5 cm - Easy Install-model - full motion - white

The Neomounts CL25-540WH1 is a universal projector ceiling mount. Because of the high weight capacity up to 35 kg and the various adjustment options, this projector ceiling mount is widely applicable. The CL25-540WH1 has four extendable arms and the versatile tilt (+20°, -20°), rotate (360°) and swivel (+8°, -8°) technology, provides optimal placement of the projection on any canvas, screen or wall. The support is also adjustable in height from 60,5 to 90,5 cm.

The Neomounts CL25-540WH1 is equipped with an Easy-release system, which highly eases installation; (de)installation of the projector to the projector mount can be done in an instant and by only one person. In addition, the round pole allows easy installation to a suspended ceiling. Finally, the pole of the Neomounts projector mount can be tilted on the ceiling side, so that installation against a sloped ceiling is effortless. The fixation of the mount itself is sturdy and firm, therefore vibration free.

The cable management system of the CL25-540WH1 ensures the cables are neatly concealed, because they are routed through the pole of the projector ceiling mount.

Neomounts®

CL25-540WH1

NEOMOUNTS CL25-540WH1 BEAMER CEILING

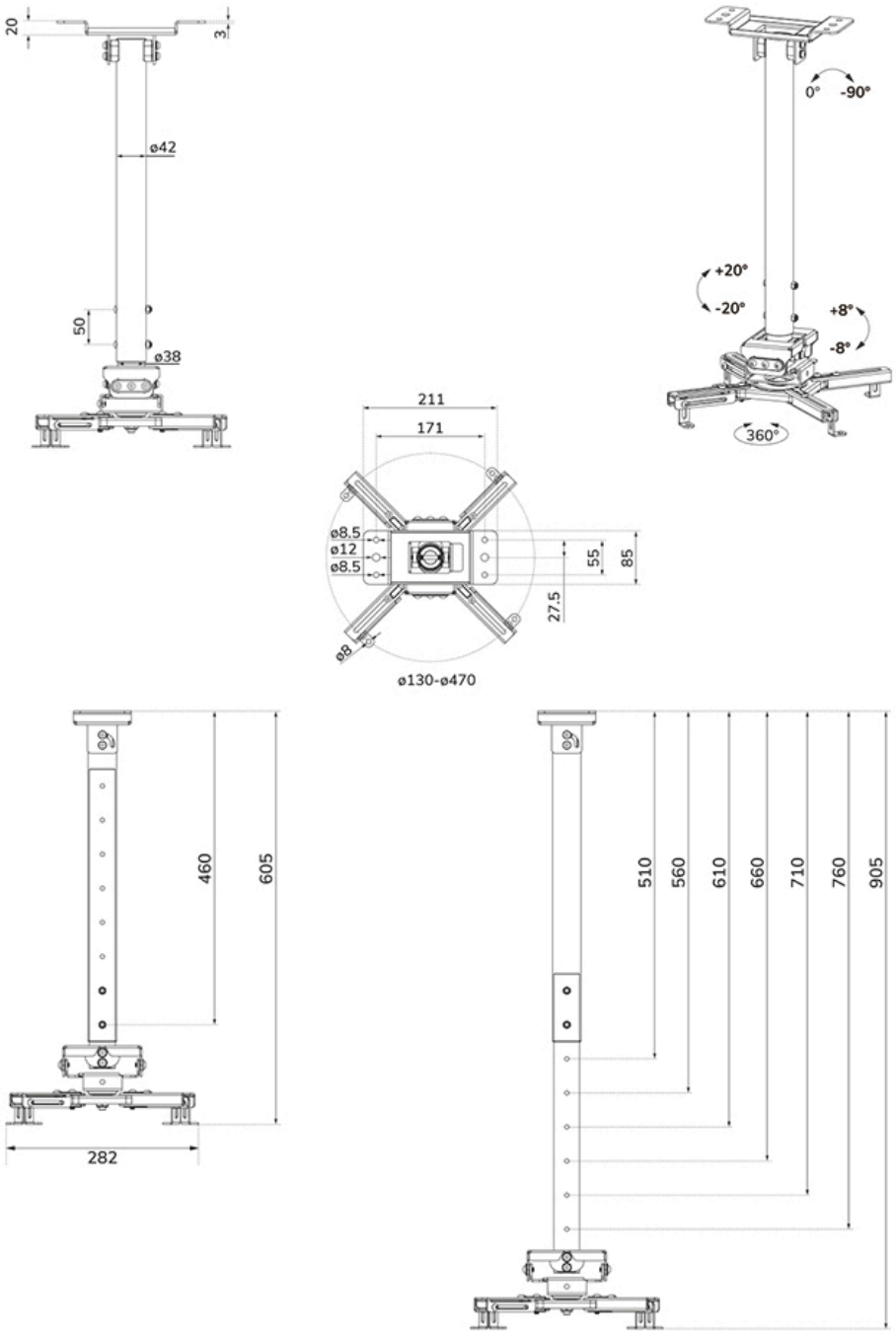

Neomounts

Measuring unit: mm