U2424H/U2424HE Outline Dimension
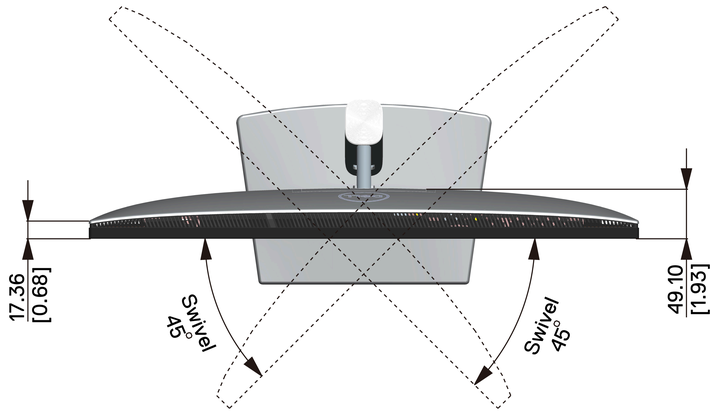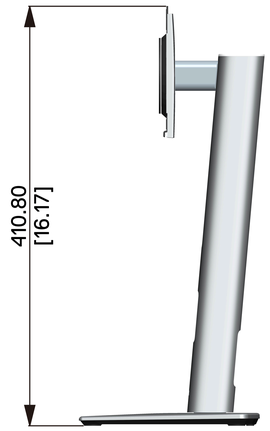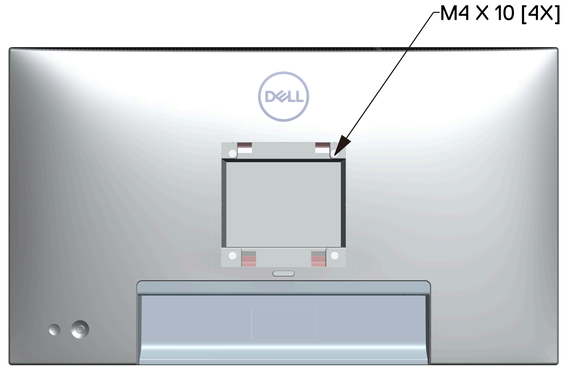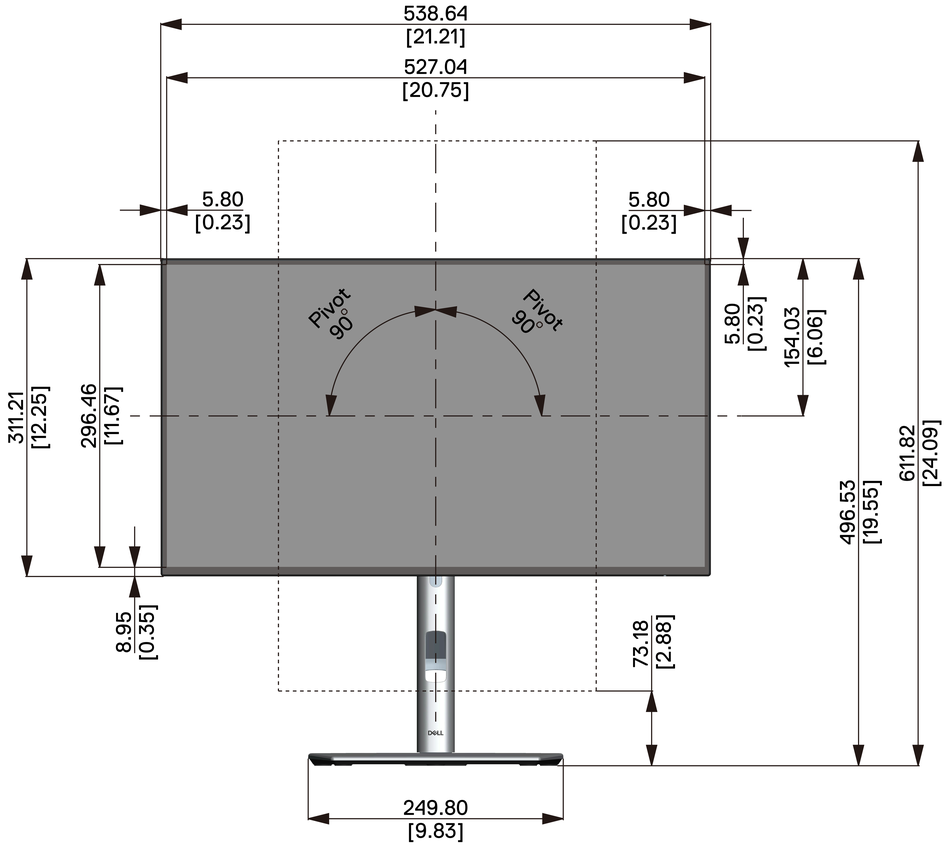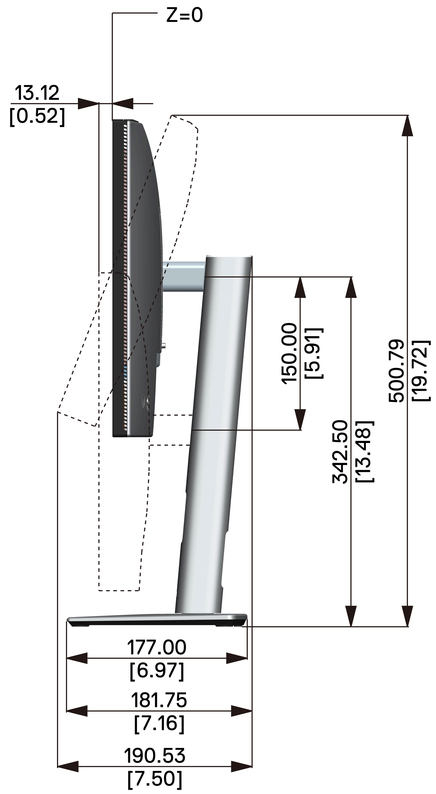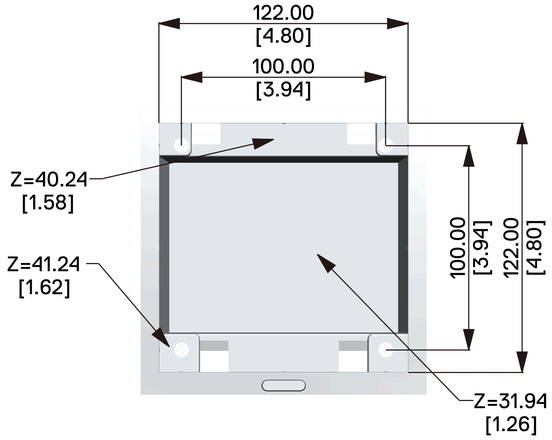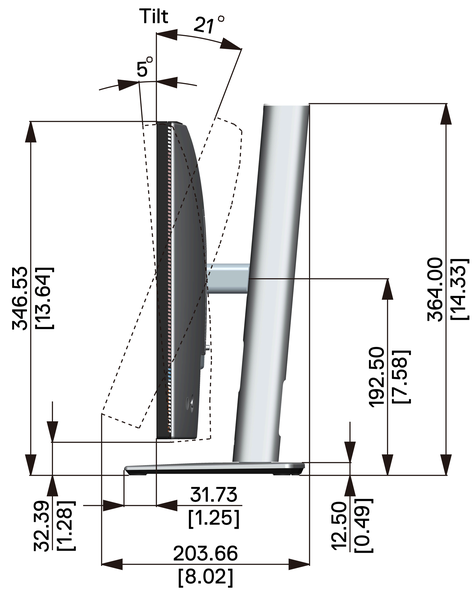
Unit: mm [inch]
Dimension: Nominal
Drawing: Not to scale