LCD Monitor

User Manual

DesignVue Designer Monitor | PD Series

AQCOLOR®
Colors You Can Trust

Copyright

Copyright © 2022 by BenQ Corporation. All rights reserved. No part of this publication may be reproduced, transmitted, transcribed, stored in a retrieval system or translated into any language or computer language, in any form or by any means, electronic, mechanical, magnetic, optical, chemical, manual or otherwise, without the prior written permission of BenQ Corporation.

Disclaimer

BenQ Corporation makes no representations or warranties, either expressed or implied, with respect to the contents hereof and specifically disclaims any warranties, merchantability or fitness for any particular purpose. Further, BenQ Corporation reserves the right to revise this publication and to make changes from time to time in the contents hereof without obligation of BenQ Corporation to notify any person of such revision or changes.

BenQ flicker-free technology maintains a stable backlight with a DC dimmer that eliminates the primary cause of monitor flicker, making it easier on the eyes. The performance of flicker-free may be affected by external factors such as poor cable quality, unstable power supply, signal interference, or poor grounding, and not limited to the above mentioned external factors. (Applicable for flicker-free models only.)

BenQ ecoFACTS

BenQ has been dedicated to the design and development of greener product as part of its aspiration to realize the ideal of the "Bringing Enjoyment 'N Quality to Life" corporate vision with the ultimate goal to achieve a low-carbon society. Besides meeting international regulatory requirement and standards pertaining to environmental management, BenQ has spared no efforts in pushing our initiatives further to incorporate life cycle design in the aspects of material selection, manufacturing, packaging, transportation, using and disposal of the products. BenQ ecoFACTS label lists key eco-friendly design highlights of each product, hoping to ensure that consumers make informed green choices at purchase. Check out BenQ's CSR Website at http://csr.BenQ.com/ for more details on BenQ's environmental commitments and achievements.

Product support

This document aims to provide the most updated and accurate information to customers, and thus all contents may be modified from time to time without prior notice. Please visit the website for the latest version of this document and other product information. Available files vary by model.

1. Make sure your computer is connected to the Internet.
2. Visit the local website from Support.BenQ.com. The website layout and content may vary by region/country.
   - User manual and related document
   - Drivers and applications
   - (EU only) Dismantled information: Available on the user manual download page. This document is provided based on Regulation (EU) 2019/2021 to repair or recycle your product. Always contact the local customer service for servicing within the warranty period. If you wish to repair an out-of-warranty product, you are recommended to go to a qualified service personnel and obtain repair parts from BenQ to ensure compatibility. Do not disassemble the product unless you are aware of the consequences. If you cannot find the dismantled information on your product, contact the local customer service for assistance.

EPREL Registration Number:
PD2705U: 908202
PD2705UE: 908210
PD2705UA: 1335500
PD3205U: 943566
PD3205UE: 943609
PD3205UA: 1335501

Q&A index

Start with the topics that you are interested in.

Setup

How to set up the monitor and turn it on?

Safety precautions 6
How to assemble your monitor hardware (for models with stand) 19
How to assemble your monitor hardware (for models with ergo arm stand) 28

How to adjust monitor height?

Adjusting the monitor height 38

How to wall mount the monitor?

Using the monitor wall mounting kit (purchased separately) 41

Menus and accessories

How to use the OSD menu?

5-way controller and basic menu operations 43
Hotkey Puck G2 and its basic operations 47
Navigating the main menu 57

Can I set hot keys to frequently used functions or menus?

Customizing the hot keys 45
Customizing the Controller Keys on Hotkey Puck G2 48

How to use the provided controller (Hotkey Puck G2)?

Connect the Hotkey Puck G2 to the monitor. 23
Hotkey Puck G2 and its basic operations 47

Input source and color setting

How to switch the input sources?

Connect the PC video cable. 22
Signal Input 58

Is there any recommended color setting for certain scenario?

Choosing an appropriate color mode 49

What menu options are available to each color mode?

Available menu options to each Color Mode 63

How to watch HDR content?

Working with HDR technology 54

How to connect with a Mac product?

Working with a Mac series product 49

Useful tools to enhance efficiency

Can I control two computers with one set of keyboard and mouse?

Working with two or more video sources with one set of keyboard and mouse (KVM Switch) 50

How to split screen my monitor to show images from two sources at the same time?

Displaying two sources at the same time (PIP/PBP) 54

How to preview an image of different color settings simultaneously?

Working with two color settings on the same image (DualView) 55

Maintenance and product support

How to clean the monitor?

Care and cleaning 9

How to keep the monitor not in use for a long time?

How to detach the stand (for models with stand) 26

How to detach the stand (for models with ergo arm stand) 36

Care and cleaning 9

I need more support.

Product support 3

Servicing 9

Safety precautions

Power safety

Please follow these safety instructions for best performance, and long life for your monitor.

- The AC plug isolates this equipment from the AC supply.
- The power supply cord serves as a power disconnect device for pluggable equipment. The socket outlet should be installed near the equipment and be easily accessible.
- This product should be operated from the type of power indicated on the marked label. If you are not sure of the type of power available, consult your dealer or local power company.
- The Class I pluggable equipment Type A must be connected to protective earth.
- An approved power cord greater or equal to H03VV-F or H05VV-F, 2G or 3G, 0.75mm^2 must be used.
- Use only the power cord provided by BenQ. Never use a power cord that appears to be damaged or frayed.
- To avoid possible damage to the monitor, do not use it in a region where power supply is unstable.
- Ensure that the power cord is connected to a grounded power outlet before turning on the monitor.
- To avoid possible danger, observe the total electric load when using the monitor with a (multi-outlet) extension cord.
- Always turn off the monitor before unplugging the power cord.

For Germany only:

- (If the weight of the product is less than or equal to 3 kg) An approved power cord greater or equal to H03VV-F, 3G, 0.75mm^2 must be used.
- (If the weight of the product is more than 3 kg) An approved power cord greater or equal to H05VV-F or H05RR-F, 3G, 0.75mm^2 must be used.
- (If a remote control is provided) RISK OF EXPLOSION IF BATTERY IS REPLACED BY AN INCORRECT TYPE. DISPOSE OF USED BATTERIES ACCORDING TO THE INSTRUCTIONS.

For models with adapter:

- Use only the power adapter supplied with your LCD Monitor. Use of another type of power adapter will result in malfunction and/or danger.
- Allow adequate ventilation around the adapter when using it to operate the device or charge the battery. Do not cover the power adapter with paper or other objects that will reduce cooling. Do not use the power adapter while it is inside a carrying case.
- Connect the power adapter to a proper power source.
- Do not attempt to service the power adapter. There are no service parts inside. Replace the unit if it is damaged or exposed to excess moisture.

Installation

- Do not use your monitor under any of the following environmental conditions:
  - Extremely high or low temperature, or in direct sunlight
  - Dusty places
  - Highly humid, exposed to rain, or close to water
  - Exposed to vibrations or impacts in places such as cars, buses, trains, and other rail vehicles
  - Near heating appliances such as radiators, heaters, fuel stoves, and other heat-generating items (including audio amplifiers)
  - An enclosed place (such as a closet or bookcase) without appropriate ventilation
  - An uneven or sloping surface
  - Exposed to chemical substances or smoke
- Carry the monitor carefully.
- Do not place heavy loads on the monitor to avoid possible personal injury or damage to the monitor.
- Ensure that children do not hang or climb onto the monitor.
- Keep all packing bags out of reach of children.

Operation

- To protect your eyesight, please refer to the user manual to set the optimal screen resolution and the viewing distance.
- To reduce eye fatigue, take a break on a regular basis while using the monitor.
- Avoid taking either one of the following actions for a long time. Otherwise, burn marks may occur.
  - Play images that cannot occupy the screen entirely.
  - Place a still image on the screen.
- To avoid possible damage to the monitor, do not touch the monitor panel by finger tip, pen, or any other sharp objects.
- Excessively frequent plug and unplug of video connectors may cause damage to the monitor.
- This monitor is designed mainly for personal use. If you want to use the monitor in a public place or a harsh environment, contact your nearest BenQ service center for assistance.
- To avoid possible electric shock, do not dissemble or repair the monitor.
- If a bad smell or an abnormal sound appears to come from the monitor, contact your nearest BenQ service center for assistance immediately.

Caution

- The distance between you and the monitor should be 2.5 to 3 times the diagonal width of the screen.
- Looking at the screen for an extended period of time causes eye fatigue and may deteriorate your eyesight. Rest your eyes for 5 ~ 10 minutes for every 1 hour of product use.
- Reduce your eye strain by focusing on objects far way.
- Frequent blinking and eye exercise help keep your eyes from drying out.

Safety notice for remote control (applicable if a remote control is provided)

- Do not put the remote control in the direct heat, humidity, and avoid fire.
- Do not drop the remote control.
- Do not expose the remote control to water or moisture. Failure to do so could result in malfunction.
- Confirm there is no object between the remote control and the remote sensor of the product.
- When the remote control will not be used for an extended period, remove the batteries.

Battery safety notice (applicable if a remote control is provided)

The use of the wrong type of batteries may cause chemical leaks or explosion. Please note the following:

- Always ensure that the batteries are inserted with the positive and negative terminals in the correct direction as shown in the battery compartment.
- Different types of batteries have different characteristics. Do not mix different types.
- Do not mix old and new batteries. Mixing old and new batteries will shorten battery life or cause chemical leaks from the old batteries.
- When batteries fail to function, replace them immediately.
- Chemicals which leak from batteries may cause skin irritation. If any chemical matter seeps out of the batteries, wipe it up immediately using a dry cloth, and replace the batteries as soon as possible.
- Due to varying storage conditions, the battery life for the batteries included with your product may be shortened. Replace them within 3 months or as soon as you can after initial use.
- There may be local restrictions on the disposal or recycling of batteries. Consult your local regulations or waste disposal provider.

If the supplied remote control contains a coin / button cell battery, pay attention to the following notice as well.

- Do not ingest battery. Chemical Burn Hazard.
- The remote control supplied with this product contains a coin / button cell battery. If the coin / button cell battery is swallowed, it can cause severe internal burns in just 2 hours and can lead to death.
- Keep new and used batteries away from children. If the battery compartment does not close securely, stop using the product and keep it away from children.
- If you think batteries might have been swallowed or placed inside any part of the body, seek immediate medical attention.

Care and cleaning

- Do not place the monitor face down on the floor or a desk surface directly. Otherwise, scratches on the panel surface may occur.
- The equipment is to be secured to the building structure before operation.
- (For models that support wall or ceiling mounting)
  - Install your monitor and monitor mounting kit on a wall with flat surface.
  - Ensure that the wall material and the standard wall mount bracket (purchased separately) are stable enough to support the weight of the monitor.
  - Turn off the monitor and the power before disconnecting the cables from the LCD monitor.
- Always unplug the product from the power outlet before cleaning. Clean the LCD monitor surface with a lint-free, non-abrasive cloth. Avoid using any liquid, aerosol or glass cleaners.
- Slots and openings on the back or top of the cabinet are for ventilation. They must not be blocked or covered. Your monitor should never be placed near or over a radiator or heat sources, or in a built-in installation unless proper ventilation is provided.
- Do not place heavy loads on the monitor to avoid possible personal injury or damage to the monitor.
- Consider keeping the box and packaging in storage for use in the future when you may need to transport the monitor.
- Refer to the product label for information on power rating, manufacture date, and identification markings.

Servicing

- Do not attempt to service this product yourself, as opening or removing covers may expose you to dangerous voltages or other risks. If any of the above mentioned misuse or other accident such as dropping or mishandling occurs, contact qualified service personnel for servicing.
- Contact your place of purchase or visit the local website from Support.BenQ.com for more support.

Support.BenQ.com

General warranty information

Note that the monitor warranty may be void if any of the following conditions occurs:

- Documents required for warranty services have been altered by unauthorized use or is illegible.
- The model number or production number on the product has been altered, deleted, removed or made illegible.
- Repairs, modifications, or alterations have been made by unauthorized service organizations or persons.
- Damage caused by improper storage of the monitor (including but not limited to force majeure, direct exposure to sunlight, water, or fire).
- Reception problems occurred due to external signals (such as antenna, Cable TV) outside the monitor.
- Defects caused by abuse or misuse of the monitor.

- Before using the monitor, it is the sole responsibility of the user to check whether the monitor is compatible with local technical standards if the user brings the monitor out of its intended sales area. Failure to do so may cause product breakdown and the user will have the pay the repairing costs.
- It is the sole responsibility of the user if problems (such as data loss and system failure) occurred due to non-factory provided software, parts, and/or non-original accessories.
- Please use the original accessories (e.g. power cable) only with the device to avoid possible dangers such as electric shock and fire.

Typographics

Icon / Symbol	Item	Meaning
	Warning	Information mainly to prevent the damage to components, data, or personal injury caused by misuse and improper operation or behavior.
	Tip	Useful information for completing a task.
	Note	Supplementary information.

In this document, the steps needed to reach a menu may be shown in condensed form, for example: **Menu** > **System** > **Information**.

Table of Contents

Copyright 2

Disclaimer 2

Product support 3

Q&A index 4

Safety precautions 6

- Power safety 6
- Installation 7
- Operation 7
- Safety notice for remote control (applicable if a remote control is provided) 8
- Battery safety notice (applicable if a remote control is provided) 8
- Care and cleaning 9
- Servicing 9
- General warranty information 9

Getting started 13

Getting to know your monitor 16

- Front view 16
- Back view 16
- Connections 17

How to assemble your monitor hardware (for models with stand) 19

- How to detach the stand (for models with stand) 26

How to assemble your monitor hardware (for models with ergo arm stand) 28

- How to detach the stand (for models with ergo arm stand) 36
- Adjusting the monitor height 38
- Rotating the monitor 39
- Viewing angle adjustment 40
- Using the monitor wall mounting kit (purchased separately) 41

How to adjust your monitor 42

- The control panel 42
- 5-way controller and basic menu operations 43
- Working with the hot keys 45
- Hotkey Puck G2 and its basic operations 47
- Working with a Mac series product 49
- Adjusting **Display Mode** 49
- Choosing an appropriate color mode 49
- Working with two or more video sources with one set of keyboard and mouse (**KVM Switch**) 50
- Displaying two sources at the same time (PIP/PBP) 54
- Working with HDR technology 54

Working with two color settings on the same image (**DualView**) 55
Navigating the main menu 57
Display menu 58
Color menu 60
KVM Switch menu 65
Audio menu 66
Custom Key menu 67
System menu 69
Troubleshooting 73
Frequently asked questions (FAQ) 73
Need more help? 75

Getting started

When unpacking please check you have the following items. If any are missing or damaged, please contact the place of purchase for a replacement.

BenQ LCD Monitor	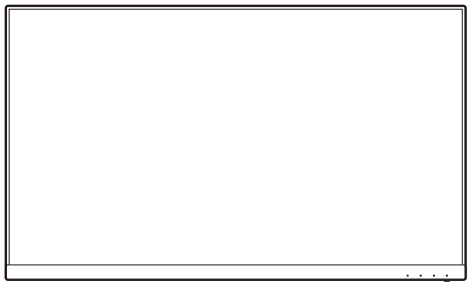
Monitor Stand (For models with stand)	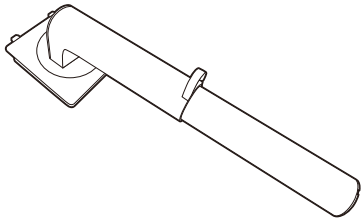
Monitor Base (For models with stand)	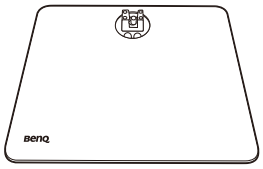
Monitor Stand with C-clamp and Hex Key (For models with ergo arm stand)	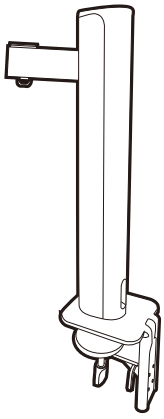
Upper arm with VESA plate (For models with ergo arm stand)	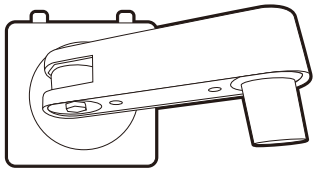
Back Cover	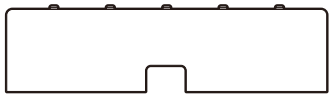
Quick Start Guide	

Safety Instructions	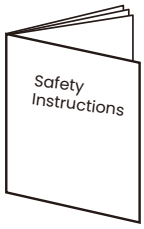
Regulatory Statements	
Power Cord (Supplied item may differ by model or region.)	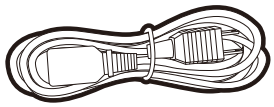
Video Cable: DP to DP	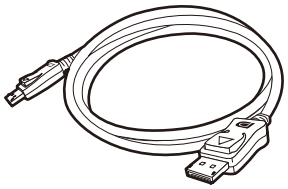
Video Cable: HDMI	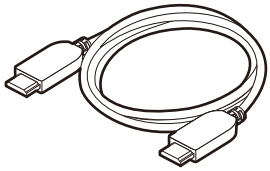
Video Cable: USB-C™	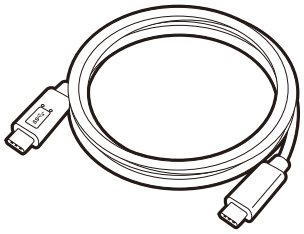
USB Cable	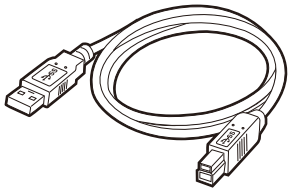
Hotkey Puck G2	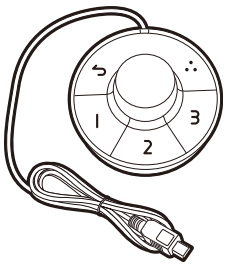

- Available accessories and the pictures shown here may differ from the actual contents and the product supplied for your region. And the package contents may subject to change without prior notice. For cables that are not supplied with your product, you can purchase them separately.
- Consider keeping the box and packaging in storage for use in the future when you may need to transport the monitor. The fitted foam packing is ideal for protecting the monitor during transport.
- Accessories and cables may be included or sold separately depending on the product supplied for your region.

Always keep the product and accessories out of reach of small children.

Getting to know your monitor

Front view

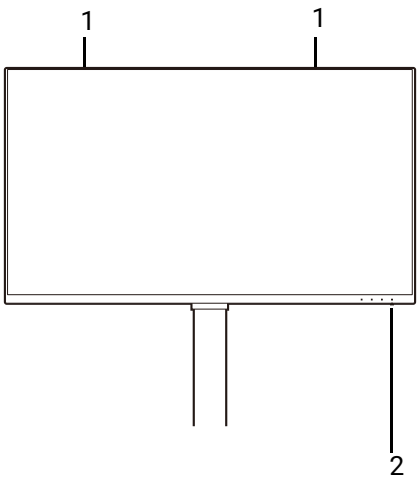

1. Speakers
2. Power LED indicator

Back view

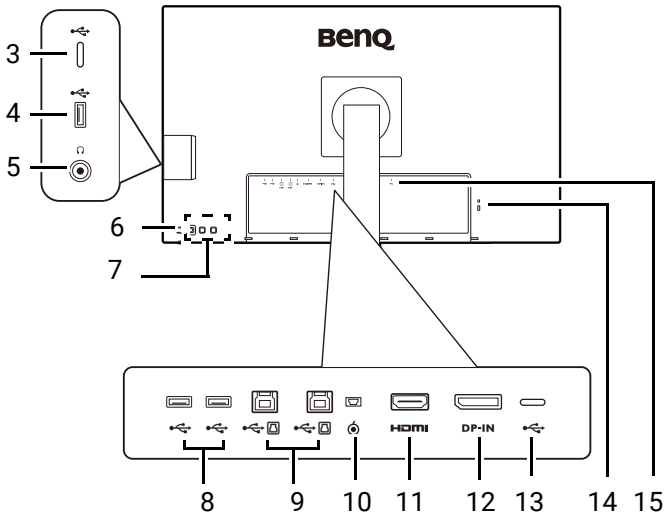

3. USB-C™ port (for data transfer only)
4. USB 3.2 Gen 1 ports (downstream; connecting to the USB devices)
5. Headphone jack
6. Power button
7. Control keys
8. USB 3.2 Gen 1 ports (downstream; connecting to the USB devices)
9. USB 3.2 Gen 1 ports (upstream; connecting to the PC)
10. Hotkey Puck G2 socket
11. HDMI socket
12. DisplayPort socket
13. USB-C™ port (for video, data transfer and power delivery)
14. Kensington lock slot
15. AC power input jack

- The USB data transmission speed varies according to you selection in USB-C Configuration on page 70.
- Above diagram may vary depending on the model.
- Picture may differ from product supplied for your region.

Connections

The following connection illustrations are for your reference only. For cables that are not supplied with your product, you can purchase them separately.

For detailed connection methods, see page 22 - 23.

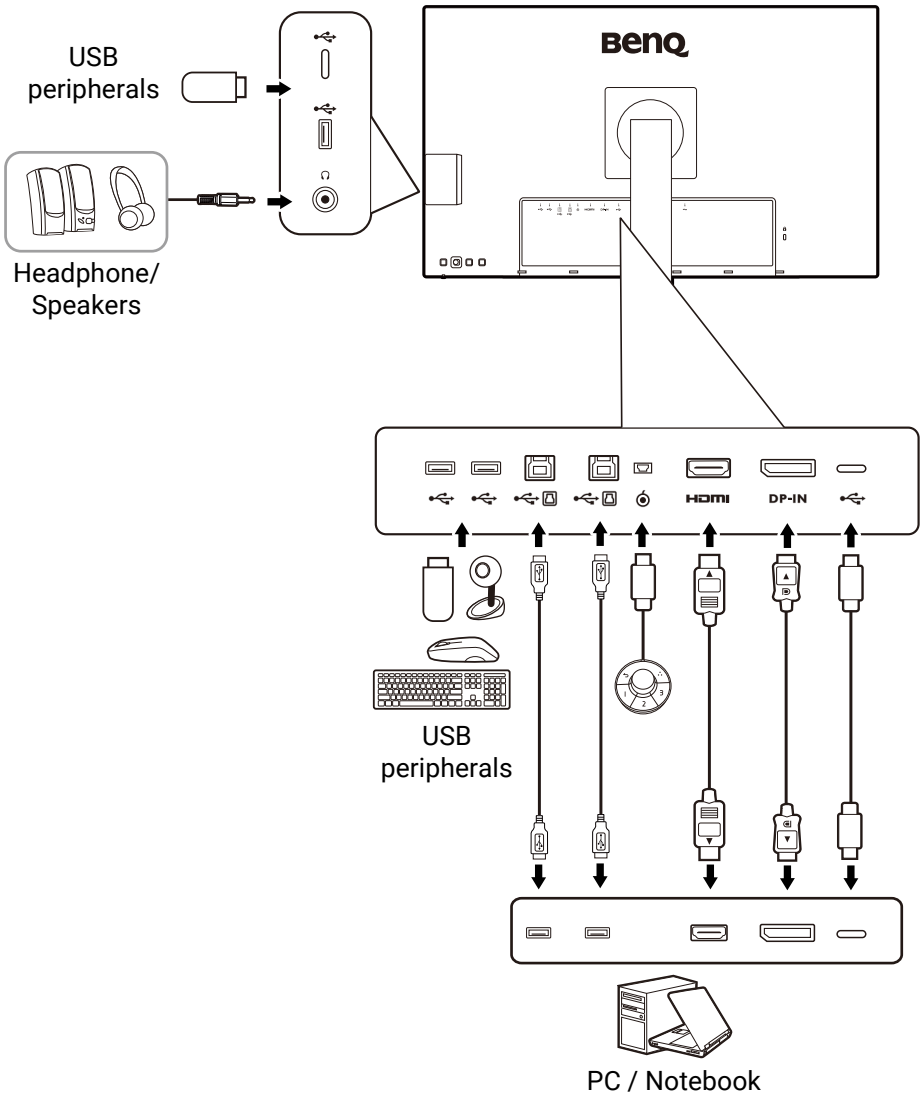

Power delivery of USB-C™ ports on your monitor

With the power delivery function, your monitor helps supply power to the connected USB-C™ devices. Available power varies by port. Make sure the devices are connected to the appropriate ports to be activated properly with sufficient power.

PD2705U / PD2705UE / PD2705UA	
USB-C™ 65W (on the rear of the monitor)	USB-C™ (on the left side of the monitor)
5V / 3A	5V / 1.5A
9V / 3A	N/A
12V / 3A	N/A
15V / 3A	N/A
20V / 3.25A	N/A

PD3205U / PD3205UE / PD3205UA	
USB-C™ 90W (on the rear of the monitor)	USB-C™ (on the left side of the monitor)
5V / 3A	5V / 1.5A
9V / 3A	N/A
12V / 3A	N/A
15V / 3A	N/A
20V / 4.5A	N/A

- A connected device needs to be equipped with a USB-C™ connector that supports charging function via USB power delivery.
- The connected device can be charged via USB-C™ port even when the monitor is in power saving mode.(*)
- The USB power delivery is up to 65W (PD2705U) / 90W (PD3205U). If the connected device requires more than the delivered power for operation or for boot up (when the battery is drained), use the original power adapter that came with the device.
- The information is based on the standard testing criteria and is provided for reference. The compatibility is not guaranteed as the user environments vary. If a separately purchased USB-C™ cable is used, make sure the cable is certified by USB-IF and is full-featured, with power delivery and video / audio / data transfer functions.

*: Charging via USB-C™ in monitor power saving mode is available when the **Power Awake** function is enabled. Go to **System** > **Power Awake** and select **ON**.

How to assemble your monitor hardware (for models with stand)

- If the computer is turned on you must turn it off before continuing.
  Do not plug-in or turn-on the power to the monitor until instructed to do so.
- The following illustrations are for your reference only. The location and available input and output jacks may vary depending on the purchased model.

Avoid finger pressure on the screen surface.

1. Attach the monitor base.

Please be careful to prevent damage to the monitor. Placing the screen surface on an object like a stapler or a mouse will crack the glass or damage the LCD substrate voiding your warranty. Sliding or scraping the monitor around on your desk will scratch or damage the monitor surround and controls.

Open the box, so you can take out the box contents easily.

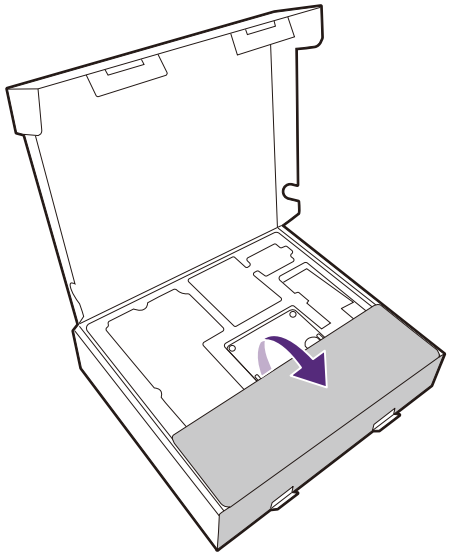

Take out the monitor base and stand. You need to remove the cushion and the foam wrap that protect the back of the monitor to access the stand arm.

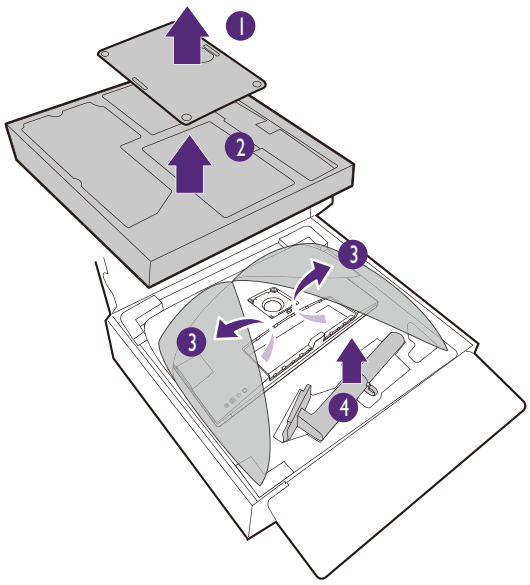

Attach the monitor stand to the monitor base as illustrated.

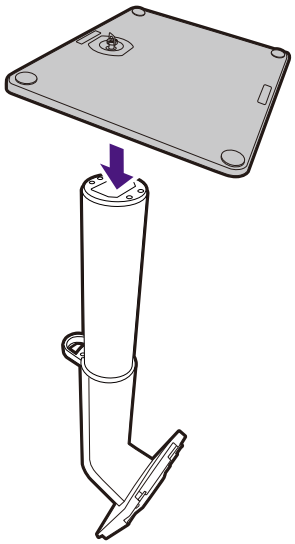

Raise the thumbscrew lid and tighten the thumbscrew as illustrated. Then push the lid back.

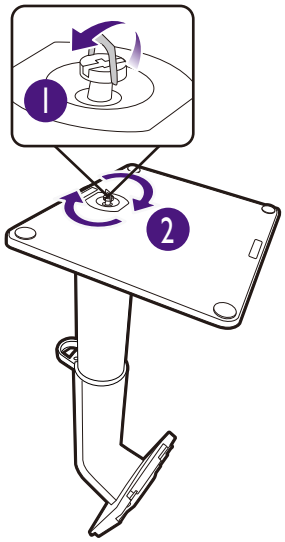

(PD2705U only) Unfold the front side of the box as illustrated to leave some room for stand installation.

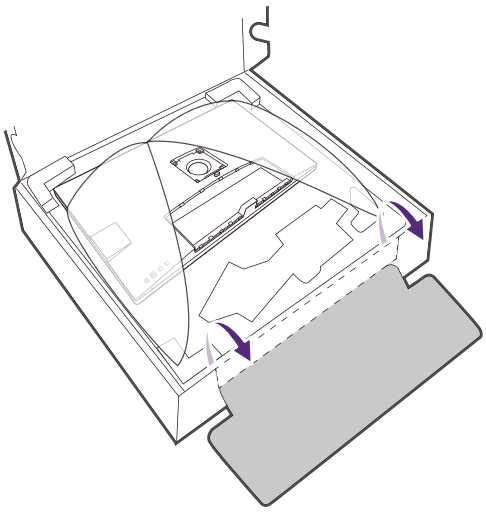

Orient and align the stand arm with the monitor, then push them together until they click and lock into place.

Gently attempt to pull them back apart to check that they have properly engaged.

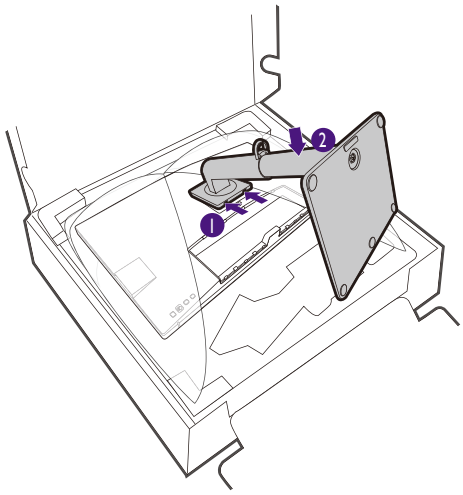

Carefully lift the monitor, turn it over and place it upright on its stand on a flat even surface.

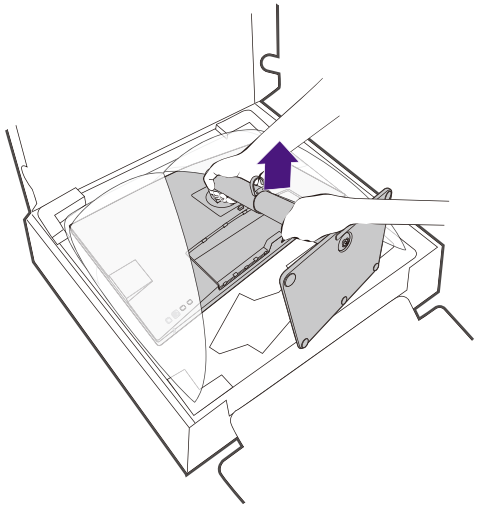

You might want to adjust the monitor stand height. See Adjusting the monitor height on page 38 for more information.

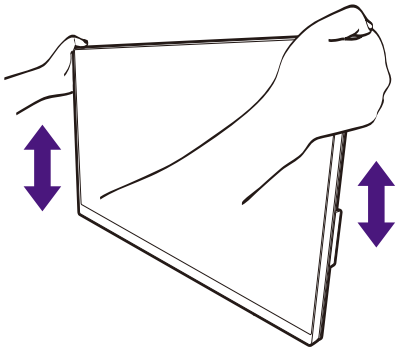

You should position the monitor and angle the screen to minimize unwanted reflections from other light sources.

Your monitor is an edge-to-edge monitor and should be handled with care. Avoid finder pressure on the screen surface. Adjust the screen angle by placing your hands on the top and on the bottom of the monitor as illustrated. Excessive force on the display is prohibited.

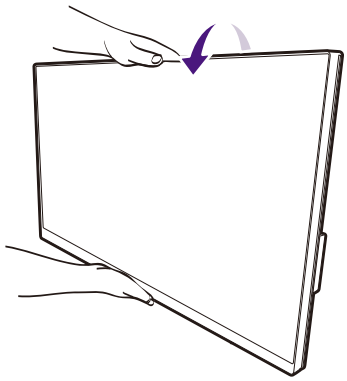

2. Connect the PC video cable.

The video cables included in your package and the socket illustrations in this document may vary depending on the product supplied for your region.

1. Establish a video cable connection.
   - Connect the plug of the HDMI cable to the HDMI port on the monitor.
   - Connect the plug of the DP cable to the monitor video socket.
   - Connect the plug of the supplied USB-C™ cable to the USB-C™ port on the monitor.

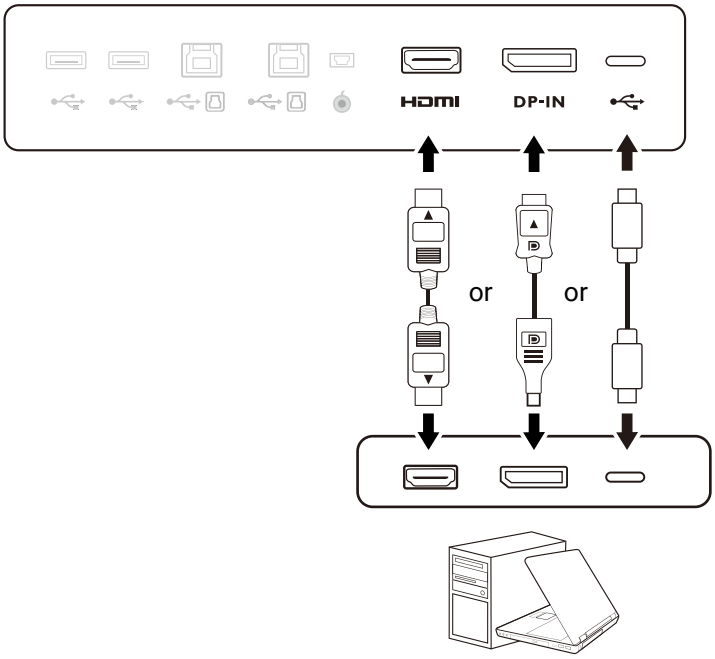

2. Connect the other end of the video cable to an appropriate port of a digital output source (e.g., a computer).
3. Tighten all finger screws to prevent the plugs from accidentally falling out during use.

(DP input only) After the monitor and the computer are powered on, if the image is not displayed, disconnect the DP cable. Connect the monitor to any video source other than DP first. Go to **System** > **Advanced** > **DisplayPort** on the OSD menu of the monitor and change the setting from **1.4** to **1.1**. Once the setting is done, unplug the current video cable and re-connect the DP cable. To go to the OSD menu, see 5-way controller and basic menu operations on page 43.

3. Connect the headphone.

You may connect the headphones to the headphone jack.

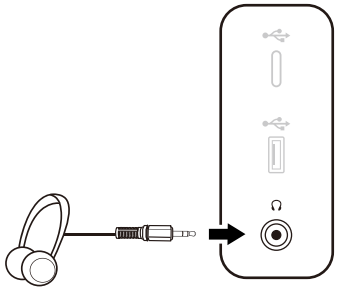

4. Connect the USB devices.

1. Connect the USB cable between the PC and the monitor (via the upstream USB port). This upstream USB port transmits data between the PC and the USB devices connected to the monitor. Note that this step is not required if the video source is from the USB-C™ inputs.
2. Connect USB devices via other USB ports (downstream) on the monitor. These downstream USB ports transmit data between the connected USB devices and the upstream port.
3. If you tend to use KVM switch, see Working with two or more video sources with one set of keyboard and mouse (KVM Switch) on page 50 for appropriate connections and more information.

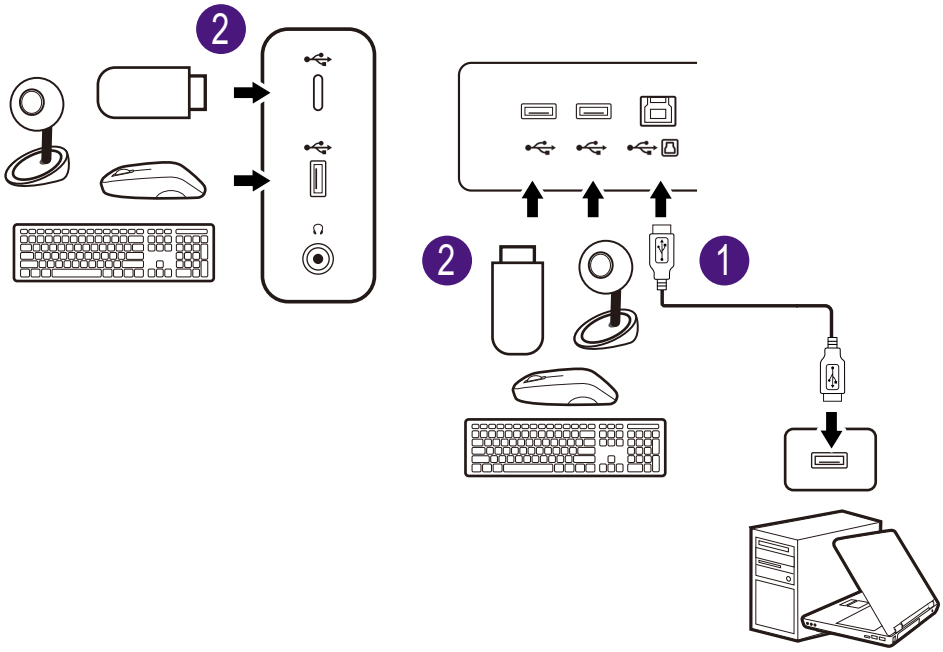

The USB-C™ port on the left or right side works as downstream port and connects with USB devices.

5. Connect the Hotkey Puck G2 to the monitor.

Connect the Hotkey Puck G2 to the mini USB port (exclusively or Hotkey Puck G2 connection) on the rear of the monitor. For more information on Hotkey Puck G2, see Hotkey Puck G2 and its basic operations on page 47.

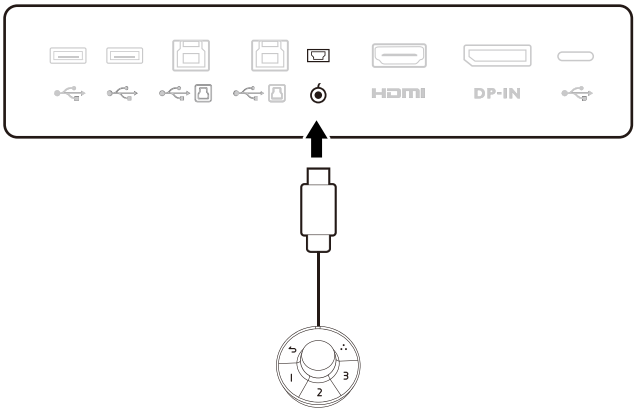

6. Connect the power cable to the monitor.

Plug one end of the power cord into the socket labelled ~ on the rear of the monitor. Do not connect the other end to a power outlet just yet.

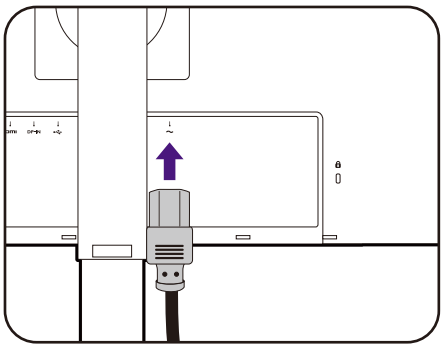

7. Install the back cover.

Gently lift the display up and extend it to the maximum extended position. Then tilt the monitor to install/remove the I/O cover easily.

Align the back cover with the holes on the back of the monitor, and press both sides and the upper part of the cover against the holes to lock it into place as illustrated.

Push the lower part of the back cover toward the monitor to secure it.

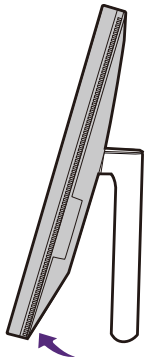

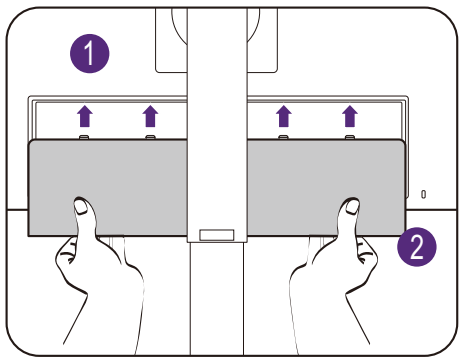

8. Organize the cables.

Route the cables via the cable clip.

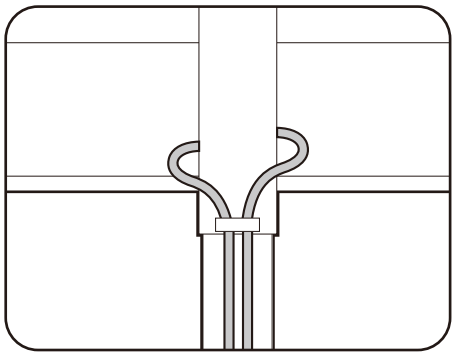

9. Connect-to and turn-on the power.

Plug the other end of the power cord into a power outlet and turn it on.

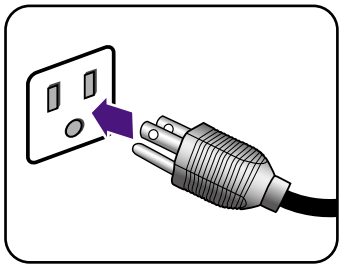

Picture may differ from product supplied for your region.

Turn on the monitor by pressing the power button on the monitor.

Turn on the computer, too.

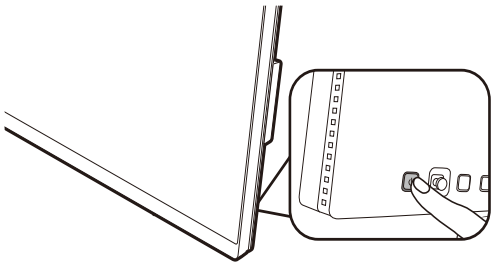

Available input icons vary by model.

To extend the service life of the product, we recommend that you use your computer's power management function.

How to detach the stand (for models with stand)

1. Prepare the monitor and area.

Turn off the monitor and the power before unplugging the power cable. Turn off the computer before unplugging the monitor signal cable.

2. Remove the back cover.

Gently lift the display up and extend it to the maximum extended position. Then tilt the monitor to install/remove the I/O cover easily.

Remove the back cover from its bottom as illustrated. Unplug all cables carefully.

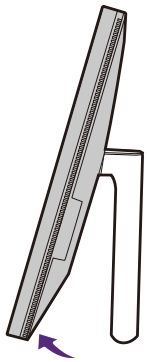

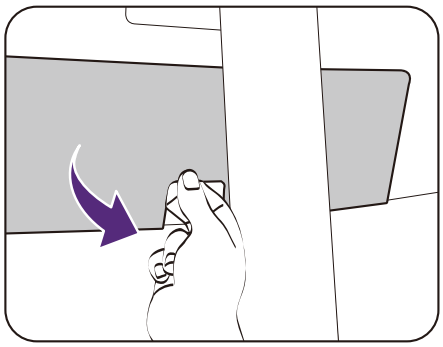

Protect the monitor and screen by clearing a flat open area on your desk and placing a soft item like a towel on the desk for padding, before laying the screen face down on a flat clean padded surface.

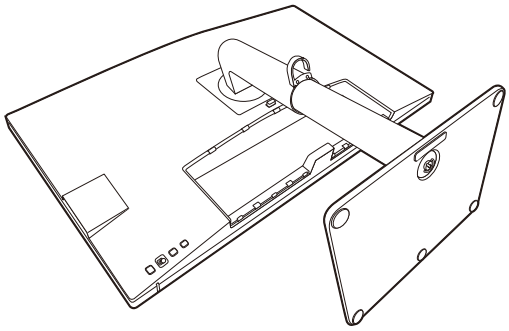

Please be careful to prevent damage to the monitor. Placing the screen surface on an object like a stapler or a mouse will crack the glass or damage the LCD substrate voiding your warranty. Sliding or scraping the monitor around on your desk will scratch or damage the monitor surround and controls.

3. Remove the monitor stand.

While pressing and holding the quick release button, detach the stand from the monitor.

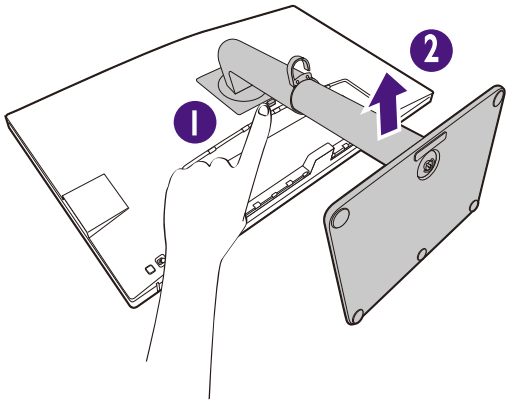

If the monitor stand is removed for wall mounting, see Using the monitor wall mounting kit (purchased separately) on page 41 and the instruction manual of your wall mount bracket (purchased separately) for more information.

4. Remove the monitor base.

Release the thumbscrew on the bottom of the monitor base.

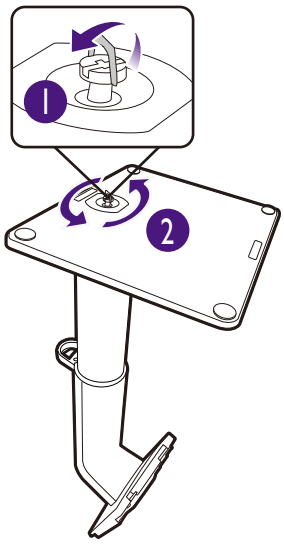

And then detach the base from the stand.

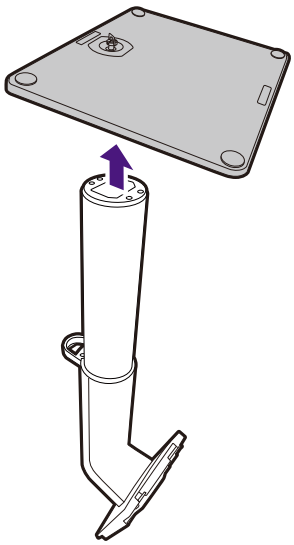

How to assemble your monitor hardware (for models with ergo arm stand)

- The ergo arm stand has been adjusted and tested to support the weight of the bundled monitor to provide smoothness and stability. To avoid possible personal injury or damage to the monitor, do not attach the ergo arm stand to other monitors.
- If the computer is turned on you must turn it off before continuing.
  Do not plug-in or turn-on the power to the monitor until instructed to do so.
- The following illustrations are for your reference only. The location and available input and output jacks may vary depending on the purchased model.

Avoid finger pressure on the screen surface.

1. Check where to install the arm.

The desk should be placed on a flat even area and should be stable enough to hold the weight of the ergo arm stand and the monitor.

The ergo arm stand works for clamp and grommet mounting to suit your need. Make sure there is enough room for height and articulation adjustments.

Make sure the arm is fixed to a flat desk area without a a grommet ring and a protrusion.

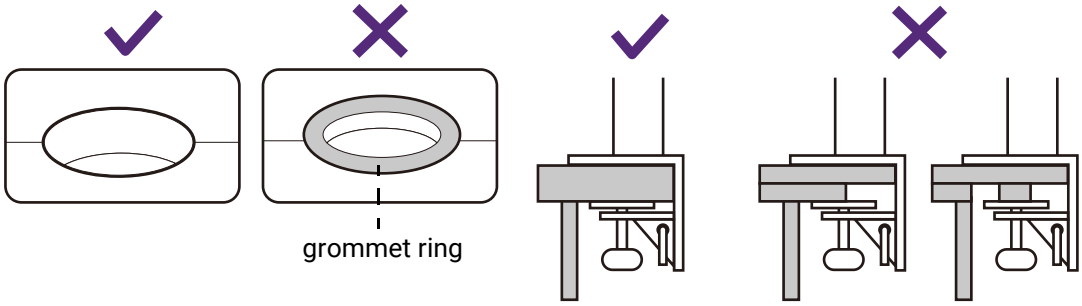

2. Check desk thickness.

Depending on the desk thickness, you can change the location of the screws that fix the C-clamp.

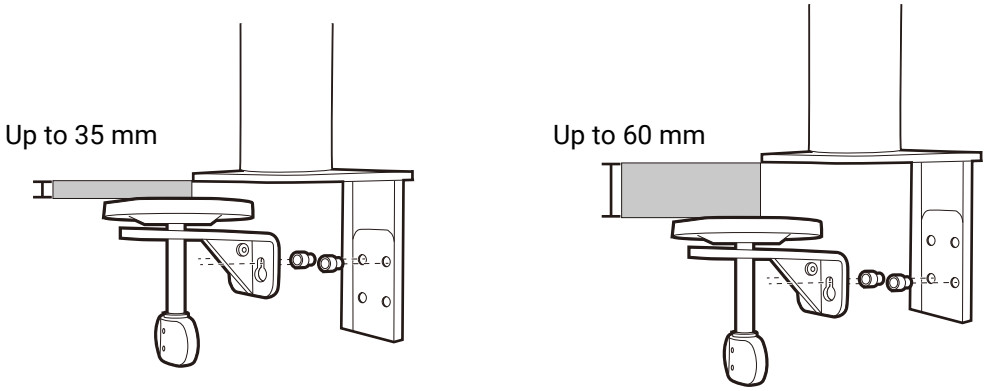

1. Use the provided Hex Key to half-release the screws that fix the C-clamp.

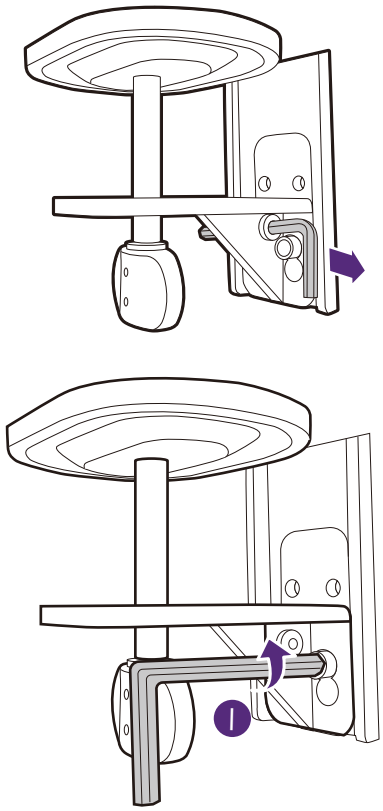

2. Lift the C-clamp up and detach it.

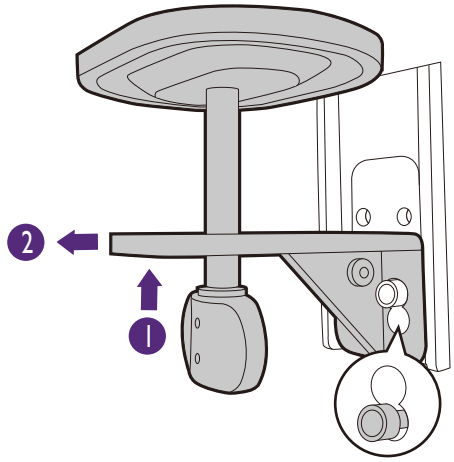

3. Release the screws completely so you can tighten them to the other set of screw holes.

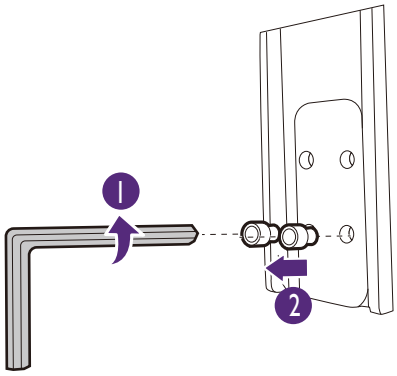

4. Half-fix the screws to the other set of screw holes.

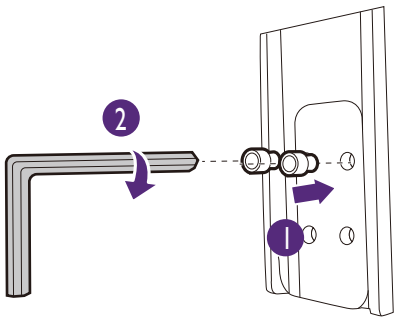

5. Attach the C-clamp to the screws.

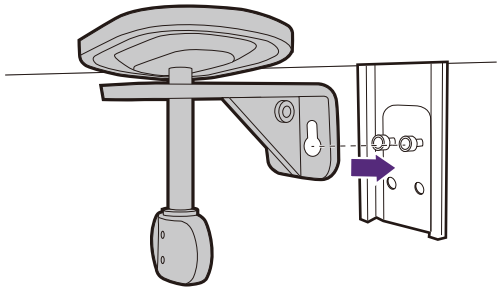

6. Tighten the screws.

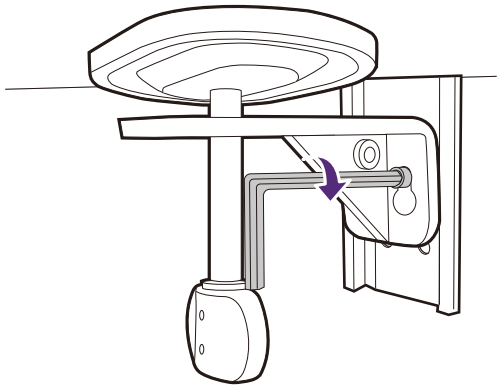

3. Decide the way to install the ergo arm.

<u>A. Clamp mounting</u>

a. Attach the stand arm to the edge of the desk.

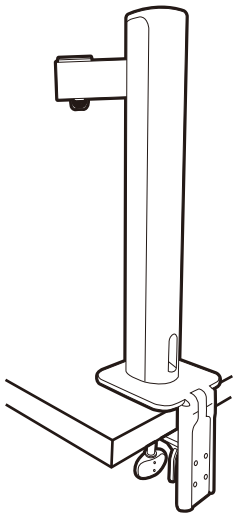

b. Turn the handle counterclockwise to fix it to the desk.

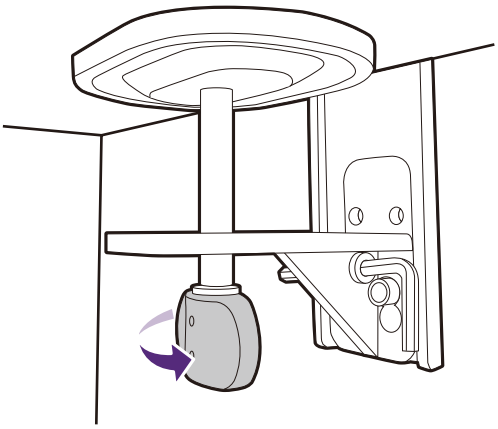

B. Grommet mounting

a. Detach the C-clamp as instructed from step 1 to step 2 in Check desk thickness. on page 28.

b. Install the stand to a desired place. Make sure there is no grommet ring as the stand needs to be fixed on a flat surface.

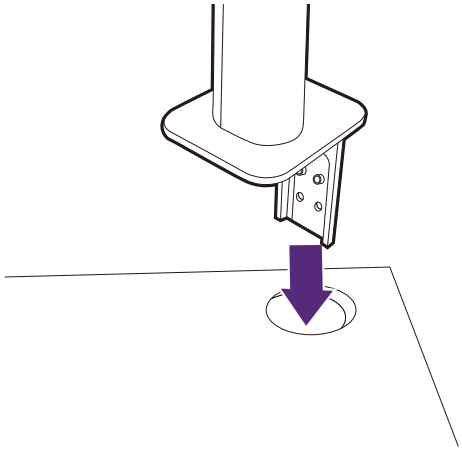

c. Attach the C-clamp to the stand and tighten the screws as instructed from step 5 to step 6 in Check desk thickness. on page 28.

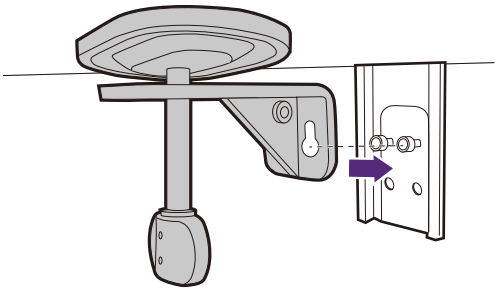

d. Turn the handle counterclockwise to fix it to the desk.

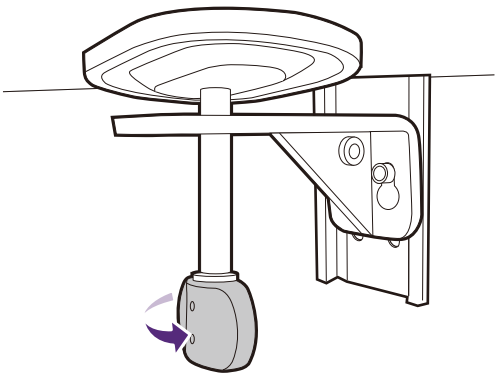

5. Mount the monitor head.

Protect the monitor and screen by clearing a flat open area on your desk and placing a soft item like the monitor packaging bag on the desk for padding.

Gently lay the screen face down on a flat clean padded surface.

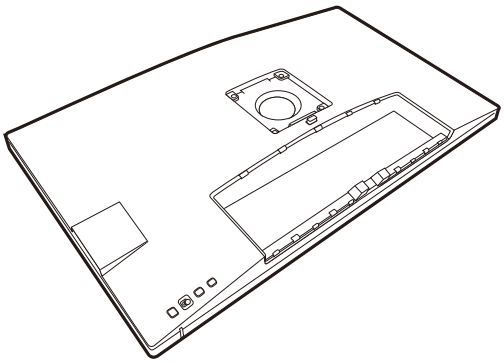

Please be careful to prevent damage to the monitor. Placing the screen surface on an object like a stapler or a mouse will crack the glass or damage the LCD substrate voiding your warranty. Sliding or scraping the monitor around on your desk will scratch or damage the monitor surround and controls.

Attach the upper arm to the monitor as illustrated until it locks in place.

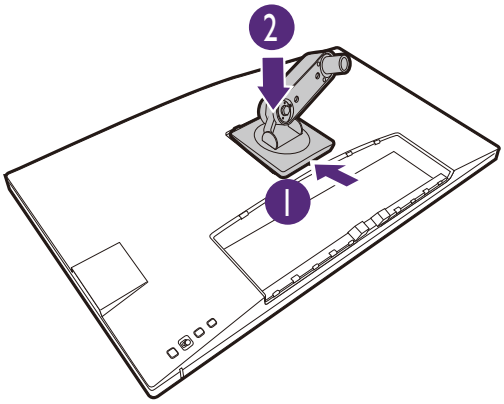

Align the upper arm with the monitor stand and place it properly without the metal part being seen.

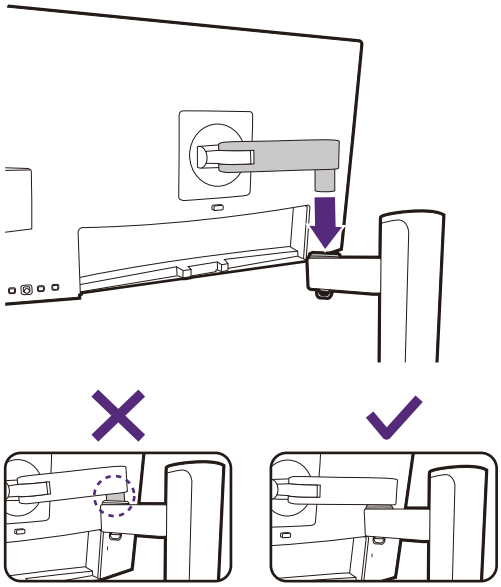

Raise the thumbscrew lid and tighten the thumbscrew as illustrated. Then push the lid back.

If the upper arm is attached properly in the previous step, you will be able to tighten the thumbscrew.

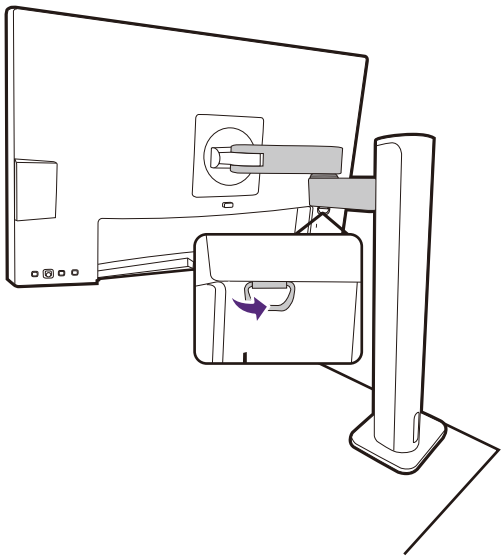

6. Connect and organize the cables.

Detach the cable management cover.

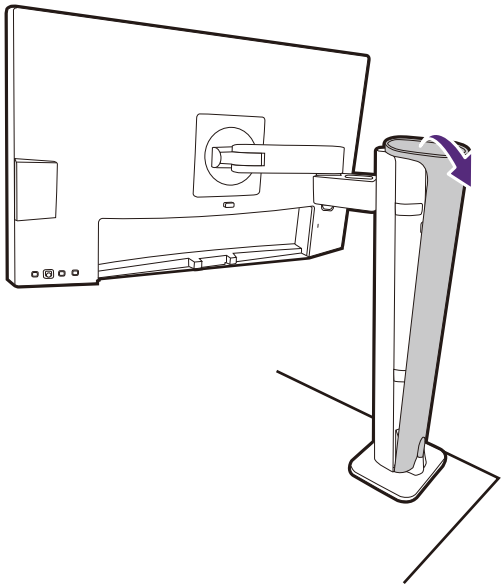

Connect and organize the cables properly. See Connect the PC video cable. on page 22 to Connect the power cable to the monitor. on page 24 for connections.

Remember to leave slack in cables (near the monitor) to prevent connectors from being pulled out inappropriately during monitor tilt or arm moves.

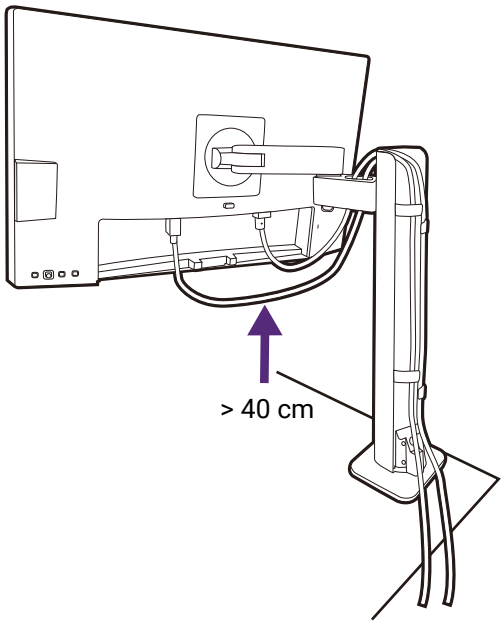

Put the cable management cover back.

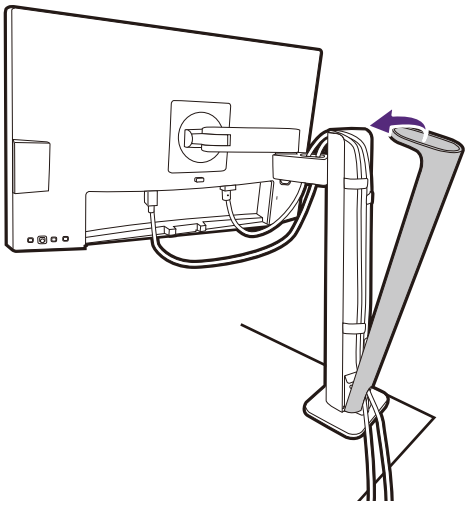

7. Install the I/O cover.

Gently lift the display up and extend it to the maximum extended position. Then tilt the monitor to install/remove the I/O cover easily.

Align the I/O cover with the holes on the back of the monitor, and press the sides and the bottom of the cover against the holes to lock it into place. Push from the bottom of the cover and check if the it has been installed properly.

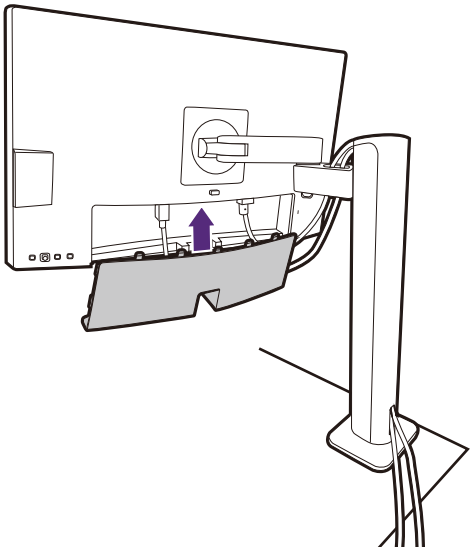

You might want to adjust the monitor stand height. See Adjusting the monitor height on page 38 for more information.

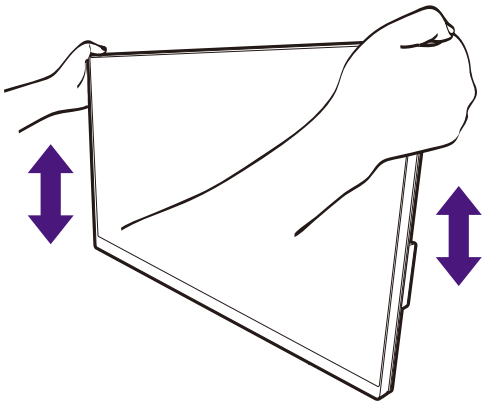

You should position the monitor and angle the screen to minimize unwanted reflections from other light sources.

Your monitor is an edge-to-edge monitor and should be handled with care. Avoid finder pressure on the screen surface. Adjust the screen angle by placing your hands on the top and on the bottom of the monitor as illustrated. Excessive force on the display is prohibited.

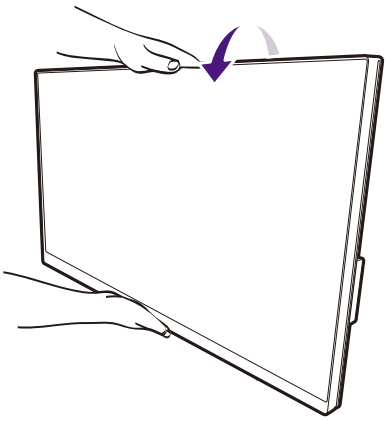

8. Connect-to and turn-on the power.

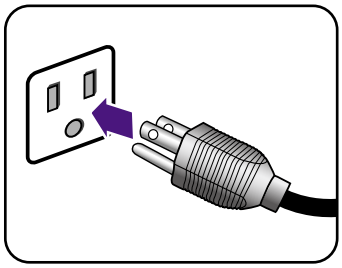

Plug the other end of the power cord into a power outlet and turn it on.

Picture may differ from product supplied for your region.

Turn on the monitor by pressing the power button on the monitor.

Turn on the computer, too.

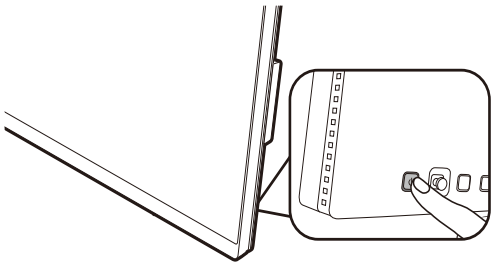

Available input icons vary by model.

To extend the service life of the product, we recommend that you use your computer's power management function.

How to detach the stand (for models with ergo arm stand)

1. Prepare the monitor and area.

Turn off the monitor and the power before unplugging the power cable. Turn off the computer before unplugging the monitor signal cable.

2. Remove the back cover and unplug all cables.

Gently lift the display up and extend it to the maximum extended position. Then tilt the monitor to install/remove the I/O cover easily.

Remove the back cover from its bottom as illustrated.

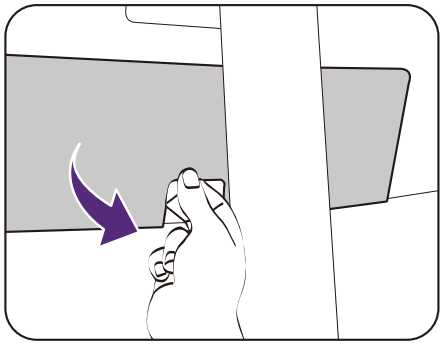

Remove cable management cover. Unplug all cables carefully.

Put the cable management cover back.

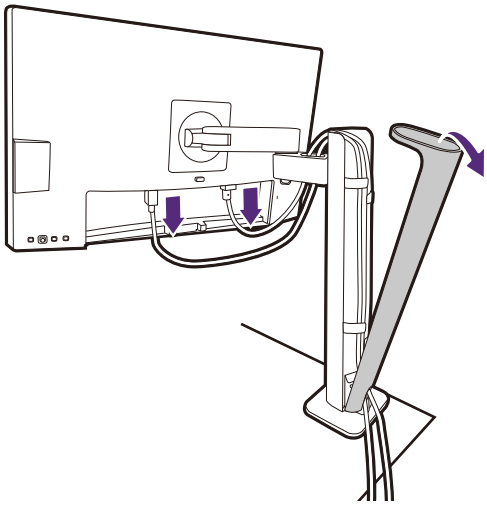

3. Detach the monitor.

Press the quick release button to release the monitor, and lift to detach the monitor.

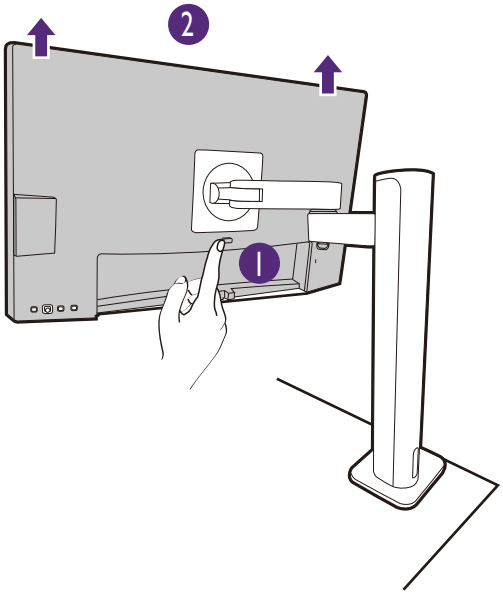

4. Remove the ergo arm stand.

Release the screws to remove the upper arm and the ergo arm stand as illustrated.

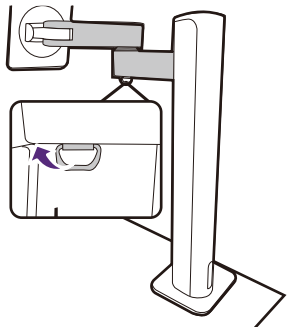

If the monitor stand is removed for wall mounting, see Using the monitor wall mounting kit (purchased separately) on page 41 and the instruction manual of your wall mount bracket (purchased separately) for more information.

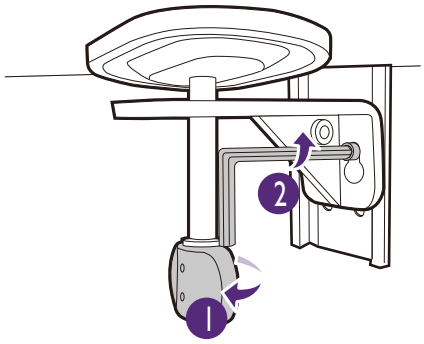

Adjusting the monitor height

To adjust the monitor height, hold both the left and the right sides of the monitor to lower the monitor or lift it up to the desired height.

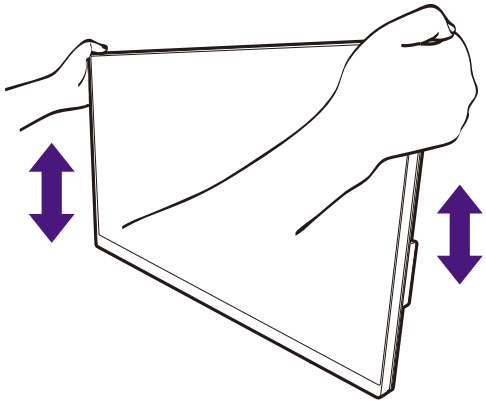

- Avoid placing hands on the upper or lower part of the height-adjustable stand or at the bottom of the monitor, as ascending or descending monitor might cause personal injuries. Keep children out of reach of the monitor while performing this operation.
- If the monitor has been rotated to portrait mode and height adjustment is desired, you should be noted that the wide screen may keep the monitor from being lowered to its minimum height.

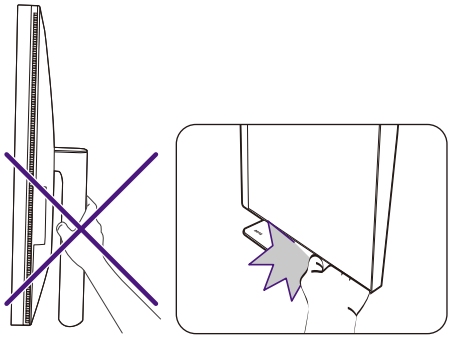

Rotating the monitor

1. Pivot the display.

Before rotating the monitor with a portrait viewing orientation, the display has to be rotated 90 degrees.

Right-click the desktop and select **Screen resolution** from the popup menu. Select **Portrait** in **Orientation**, and apply the setting.

Depending on the operating system on your PC, different procedures should be followed to adjust the screen orientation. Refer to the help document of your operating system for details.

2. Fully extend the monitor and tilt it.

Gently lift the display up and extend it to the maximum extended position. Then tilt the monitor.

The monitor should be vertically extended to allow to rotate from landscape to portrait mode.

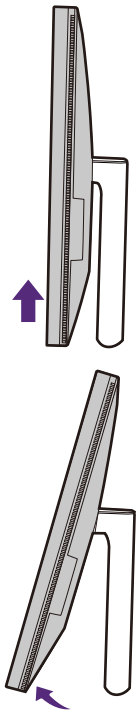

3. Rotate the monitor 90 degrees clockwise as illustrated.

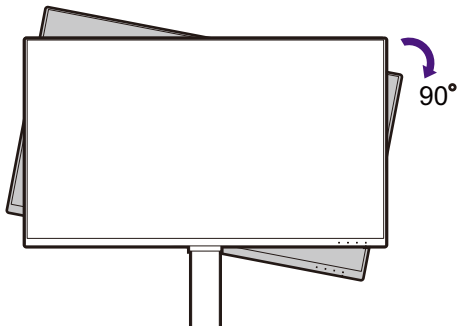

To avoid the edge of the LCD display hitting the monitor base surface while it is being rotated, do tilt and extend the monitor to the highest position before you start to rotate the display. You should also make sure there are no obstacles around the monitor and there is enough room for cables.

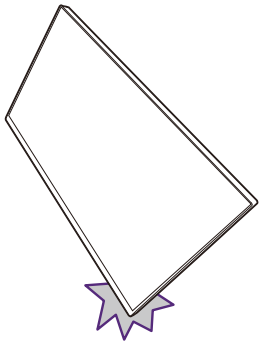

4. Adjust the monitor to the desired viewing angle.

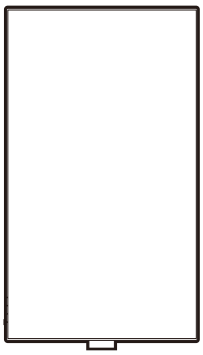

Viewing angle adjustment

You may position the screen to the desired angle with the monitor tilt, swivel, and height adjustment functions. Check the product specifications on the website for details.

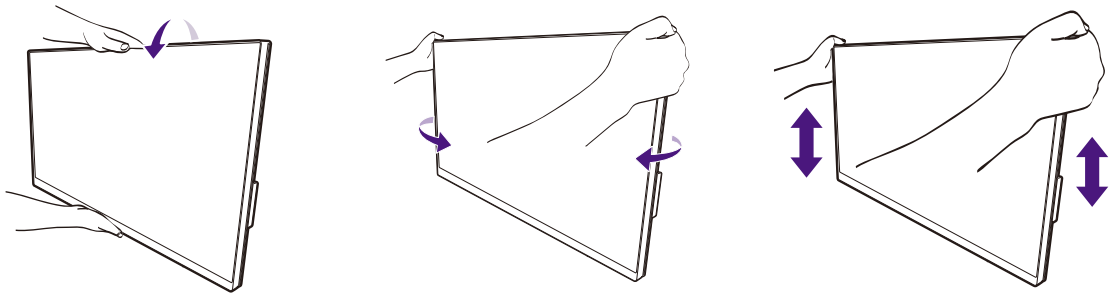

Using the monitor wall mounting kit (purchased separately)

The back of your LCD monitor has a VESA standard mount with 100mm pattern, allowing the installation of a wall mount bracket. Before starting to install a monitor wall mounting kit, please read the precautions carefully.

Precautions

- Install your monitor and monitor mounting kit on a wall with flat surface.
- Ensure that the wall material and the standard wall mount bracket (purchased separately) are stable enough to support the weight of the monitor. Refer to the product specifications on the website for weight information.
- Turn off the monitor and the power before disconnecting the cables from the LCD monitor.

1. Remove the monitor stand.

Lay the screen face down on a clean and well-padded surface. Detach the monitor stand as instructed.

- How to detach the stand (for models with stand) on page 26
- How to detach the stand (for models with ergo arm stand) on page 36

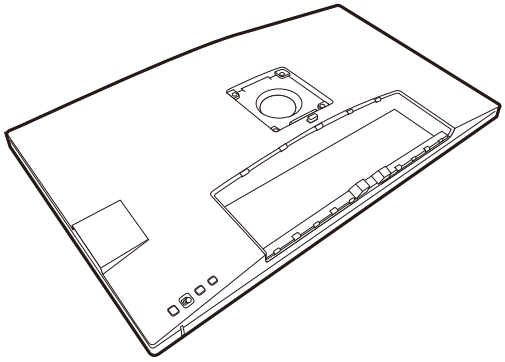

Use a cross-pointed screwdriver to release the screws that fixing the back cover to the monitor.The use of a magnetic-head screwdriver is recommended to avoid of losing the screws.

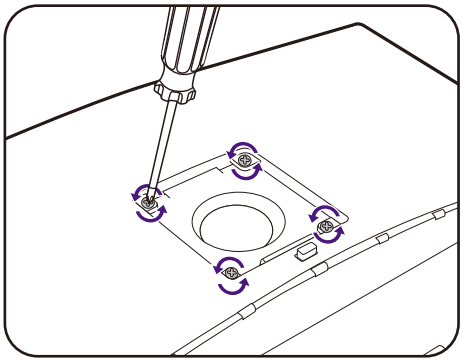

In case you intend to use your monitor on the stand in the future, please keep the monitor base, monitor stand, and screws somewhere safe for future use.

2. Follow the instruction manuals of the wall mount bracket you purchased to complete the installation.

Use four M4 x 10 mm screws to fix a VESA standard wall mount bracket to the monitor. Make sure that all screws are tightened and secured properly. Consult a professional technician or BenQ service for wall mount installation and safety precautions.

How to adjust your monitor

The control panel

All OSD (On Screen Display) menus can be accessed by the control keys. You can use the OSD menu to adjust all the settings on your monitor

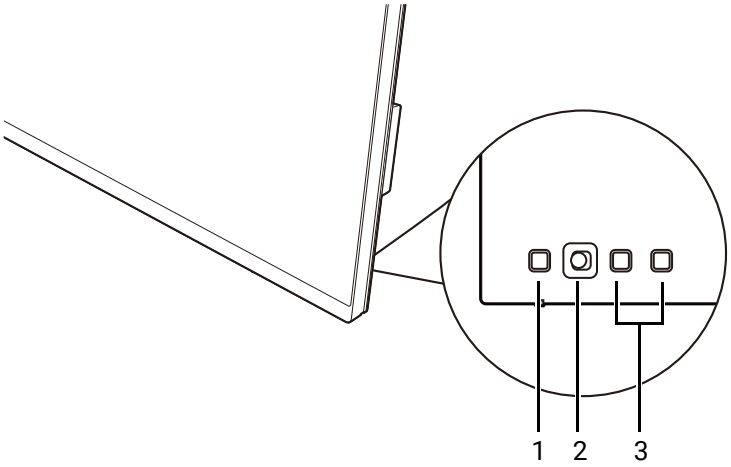

No.	Name	Description
1.	Power key	Turns the power on or off.
2.	5-way controller	Accesses the functions or menu items as instructed by the on-screen icons. See 5-way controller and basic menu operations on page 43 for more information.
3.	Custom keys	Accesses the functions or menu items displayed on the screen, right next to each key. See Working with the hot keys on page 45 for more information.

5-way controller and basic menu operations

The 5-way controller is located at the rear of the monitor. While sitting in front of the monitor, move the controller to the directions instructed by the on-screen icons for menu navigation and operations.

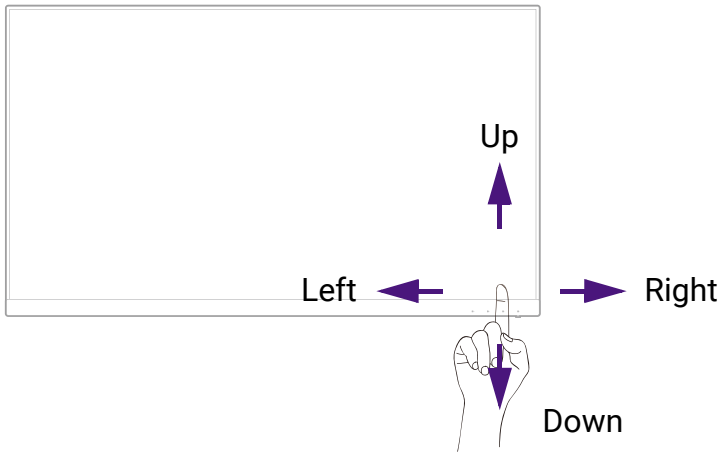

OSD icon	5-way controller operation	Function
(When no menu has been activated)		
N/A	Press the 5-way controller	• (Without video cable connection) Activates the video source selection menu. • (With video cable connection) Activates the hotkey menu.
(When the video source selection menu has been activated)		
	Move the 5-way controller to the desired direction	Switches to the desired input source. Available input icons vary by model.
(When the hotkey menu has been activated)		
	Move to the right	Activates the main menu.
	Move up	Adjusts brightness.
	Move down	Adjusts contrast.
	Move to the left	Closes the hotkey menu.
(When the main menu has been activated)		
	Press	Confirms the selection.
	Move to the right	• Enters sub menus. • Confirms the selection.
	Move up	• Goes to the previous menu item. • For up / increase adjustment.
	Move down	• Goes to the next menu item. • For down / decrease adjustment.

OSD icon	5-way controller operation	Function
	Move to the left	• Returns to the previous menu. • Exits OSD menu.

All OSD (On Screen Display) menus can be accessed by the control keys. You can use the OSD menu to adjust all the settings on your monitor. Available menu options may vary depending on the input sources, functions and settings.

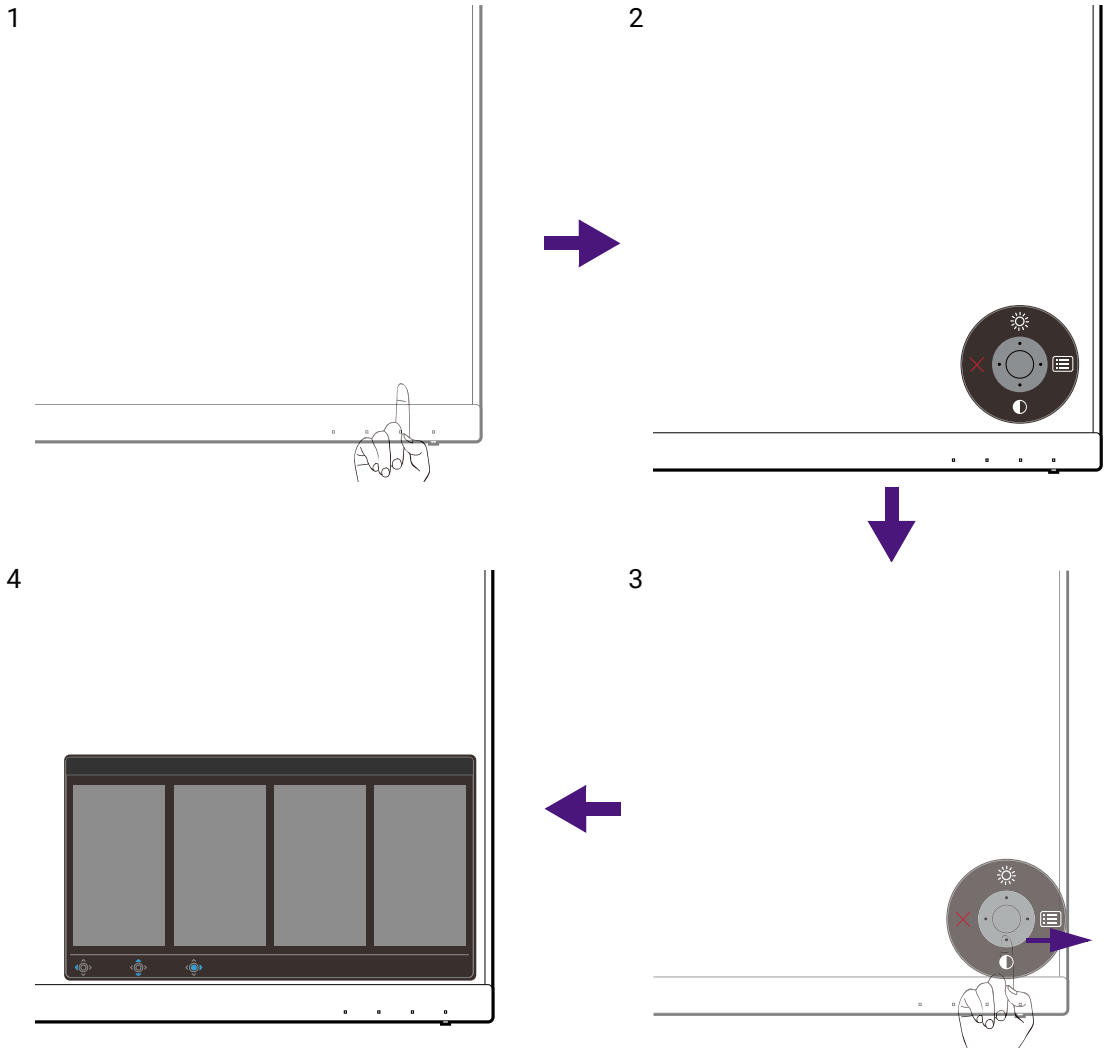

1. Press the 5-way controller.
2. The hot key menu is displayed. The top and down icons are designated for particular functions.
3. Select (**Menu**) to access the main menu.
4. On the main menu, follow the on-screen icons on the bottom of the menu to make adjustments or selection. See Navigating the main menu on page 57 for details on the menu options.

Working with the hot keys

The custom keys (located next to the 5-way controller) perform as hot keys to provide direct access to pre-defined functions. You can change the default setting and designate different functions for these keys.

Accessing the hot key functions

1. Press any of the custom keys on the rear of the monitor.
2. Press the key with the desired function repeatedly to cycle through available options on the list.

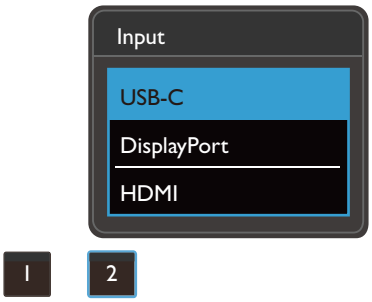

OSD icon	Function
1	Switches to a list of **Color Mode** options by default. To change the default settings, see Customizing the hot keys on page 45.
2	Switches to a list of **Input** (**Signal Input**) options by default. To change the default settings, see Customizing the hot keys on page 45.

Customizing the hot keys

1. Press the 5-way controller to bring up the hotkey menu.
2. Select (**Menu**) to access the main menu.
3. Go to **Custom Key**.
4. Select the custom key you want to change. It is either **Custom Key 1** or **Custom Key 2**.
5. On the sub menu, select a category.

6. Under the category, check to select up to 3 items for quick access by this key.

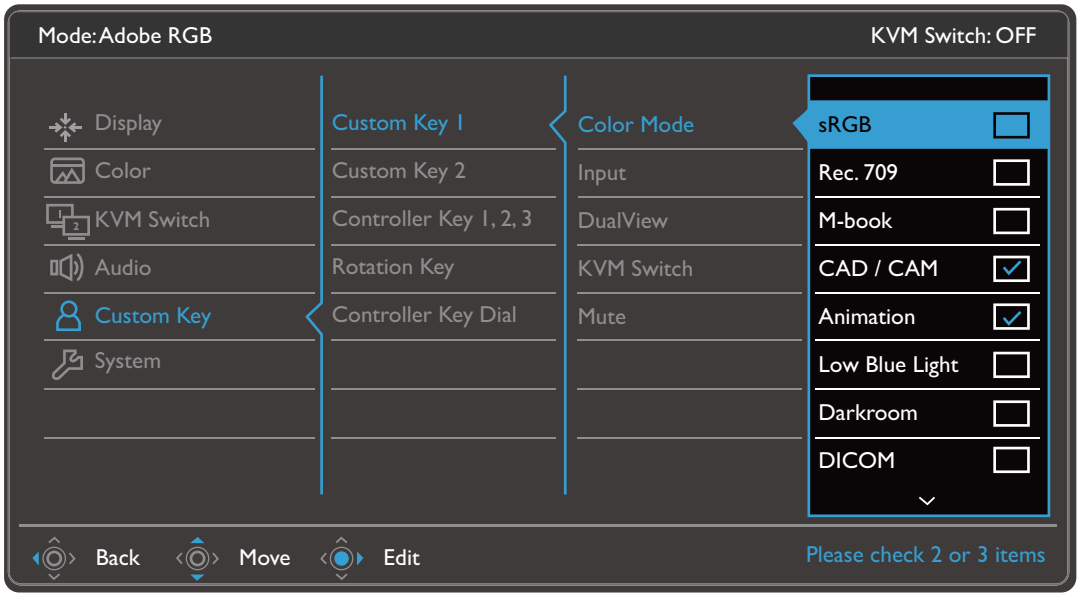

- OSD = On Screen Display.
  The hot keys only operate while the main menu is not currently displaying. Hot key displays will disappear after a few seconds of no key activity.
- To unlock the OSD controls, press and hold any key for 10 seconds.

Hotkey Puck G2 and its basic operations

Apart from the control keys, Hotkey Puck G2 also provides a quick way to control and access the OSD menu.

- You need to connect the Hotkey Puck G2 to your monitor prior to use. Follow the instructions in Connect the Hotkey Puck G2 to the monitor. on page 23.
- Hotkey Puck G2 is designed for BenQ LCD Monitor exclusively and is available for compatible models only. Do not connect it to other devices with mini USB ports.

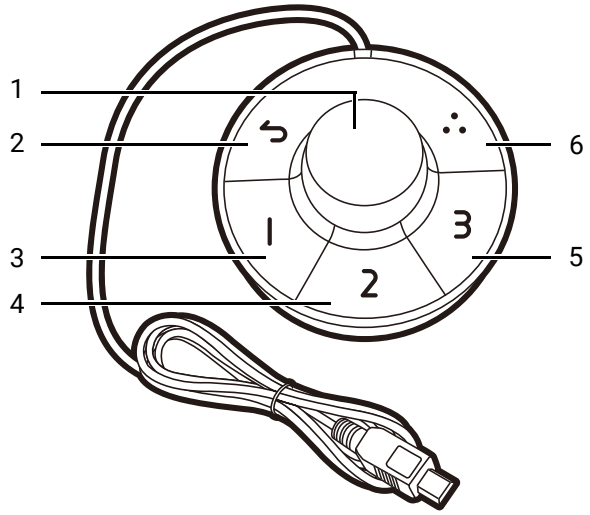

No.	Name	Description
1	Dial key	(If no menu is displayed) • Turn right or left to adjust **Brightness** by default. To change the default settings, press and hold for 3 seconds to bring up the setup menu to change the default setting. Alternatively, go to **Custom Key** > **Controller Key Dial** on the monitor. • Press to bring up the main menu. (On a menu) • Turn right to scroll down the menu. • Turn left to scroll up the menu. • Press to confirm the selection. (If a control bar is displayed) • Turn right to increase the value. • Turn left to decrease the value.
2	Return key	• Returns to the previous menu. • Exits OSD menu.
3	Controller Key 1	• Press to switch to **M-book** (**Color Mode**) by default. • Press and hold for 3 seconds to bring up the setup menu to change the default setting. Alternatively, see Customizing the Controller Keys on Hotkey Puck G2 on page 48.

No.	Name	Description
4	Controller Key 2	• Press to switch to **sRGB** (**Color Mode**). • Press and hold for 3 seconds to bring up the setup menu to change the default setting. Alternatively, see Customizing the Controller Keys on Hotkey Puck G2 on page 48.
5	Controller Key 3	• Press to switch to **Low Blue Light** (**Color Mode**). • Press and hold for 3 seconds to bring up the setup menu to change the default setting. Alternatively, see Customizing the Controller Keys on Hotkey Puck G2 on page 48.
6	Rotation Key	• Press repeatedly to cycle through available settings. • Press and hold for 3 seconds to bring up the setup menu to change the default setting. Alternatively, go to **Custom Key** > **Rotation Key** on the monitor.

Customizing the Controller Keys on Hotkey Puck G2

Keys on the Hotkey Puck G2 are designated for particular functions. You can change the default settings as desired.

1. Press the 5-way controller to bring up the hotkey menu.
2. Select (**Menu**) to access the main menu.
3. Go to **Custom Key**.
4. Select **Controller Key 1, 2, 3**.
5. On the sub menu, select a category.
6. Under the category, check to select up to 3 items for quick access by the Controller Keys on Hotkey Puck G2. The numbers displayed by the chosen items refer to the Controller Keys that the options are assigned to.

Alternatively, press and hold a key on the Hotkey Puck G2 for 3 seconds to bring up the setup menu to change the default setting.

Controlling the display with **Display Pilot**

The **Display Pilot** software is provided as an alternative to control the display. Download and install from Support.BenQ.com (see Product support on page 3).

The main functions include:

• Control of the main functions / configurations of the monitor.

• Setup of rotating the display with the monitor automatically (see page 39).

• Additional tools to extend the monitor's functionalities.

For more information, visit Support.BenQ.com for **Display Pilot** manual.

To find out the supported operating systems, visit BenQ website.

Working with a Mac series product

You can connect your monitor to a Mac series product. Note the compatibility is up to the performance and specifications of the Mac chip on your Mac product and may be updated without prior notice.

- When connecting your monitor to a Mac product, direct connection via Thunderbolt 3 or USB-C™ cable (if available on both Mac and the monitor) is recommended to ensure good image quality. See Connect the PC video cable. on page 22 for details.
- To reduce the color difference, you are recommended to set the picture mode (color mode) of your monitor to **M-book**, **Display P3**, or **DCI-P3** mode (if available). See Color Mode on page 60 for details.
- If your monitor supports certain BenQ software, check the software webpage from www.BenQ.com to see if they work on your Mac product.

If you have any inquiries about the compatibilities with Mac products, visit Support.BenQ.com and look for related topics from **FAQ** or **Knowledge**.

Adjusting **Display Mode**

To display images of aspect ratios other than your monitor aspect ratio and sizes other than your display size, you can adjust the display mode on the monitor.

1. Press the 5-way controller to bring up the hotkey menu, and select (**Menu**) to access the main menu.
2. Go to **Display** > **Display Mode**.
3. Select an appropriate display mode. The setting will take effect immediately.

Choosing an appropriate color mode

Your monitor provides various color modes that are suitable for different types of images. See Color Mode on page 60 for all the available color modes.

Go to **Color** > **Color Mode** for a desired color mode.

The computer's color profile (ICC profile) may not best suit your monitor. If you want to make sure to obtain the accurate color matching representation, change the computer's ICC profile to ensure the computer works better with the monitor. Visit Support.BenQ.com to access the **ICC Profile Installation Guide** under your monitor model for instructions. Alternatively, enable the **ICCsync** function from **Display Pilot** (page 48). Refer to the **Display Pilot** manual for details.

Working with two or more video sources with one set of keyboard and mouse (**KVM Switch**)

If you have two or more computer systems, you might find yourself busy going back and forth between several sets of keyboard and mouse to control each display separately. Now with the KVM feature and sufficient I/O ports on one monitor, you can work with one set of keyboard and mouse only. With appropriate connections, the display is switched to the available input while the keyboard and mouse control is switched as well.

Establishing KVM connections

1. Connect at least two video sources properly as instructed below or as indicated by the label near I/O ports on the rear of the monitor.
   - USB-C™ connection
   - DisplayPort and USB 1 (upstream) connections
   - HDMI and USB 2 (upstream) connections

Label near I/O ports

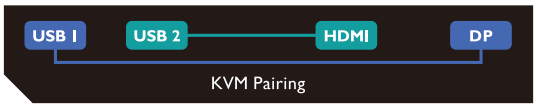

2. Connect a keyboard and a mouse to the USB ports on the monitor. Depending on the availability of a USB-C™ port on your computer, the connections vary. Refer to the following illustration.

(With a USB-C™ port on your computer)

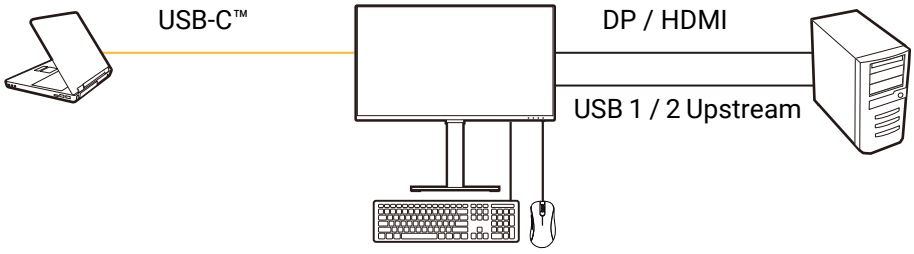

(Without a USB-C™ port on your computer)

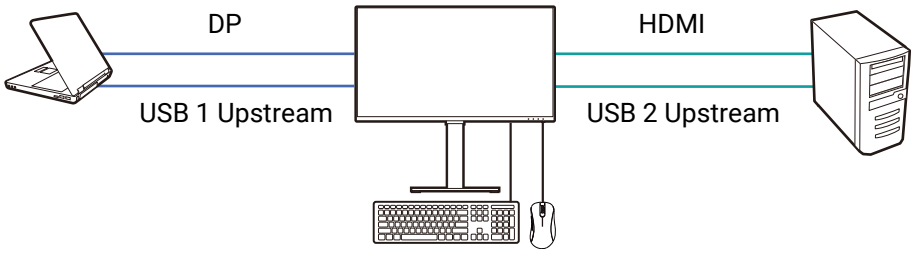

A computer with a USB-C™ port is used for reference in some of the illustrations. Refer to procedures above for appropriate connections if you don't have a USB-C™ port on your computer.

3. After two or more sets of connections are made properly, the **KVM Switch** function is enabled automatically. You can find out the status from the OSD menus.

On the main menu, the KVM status is displayed.

On the **Input** hotkey menu, a KVM icon is displayed.

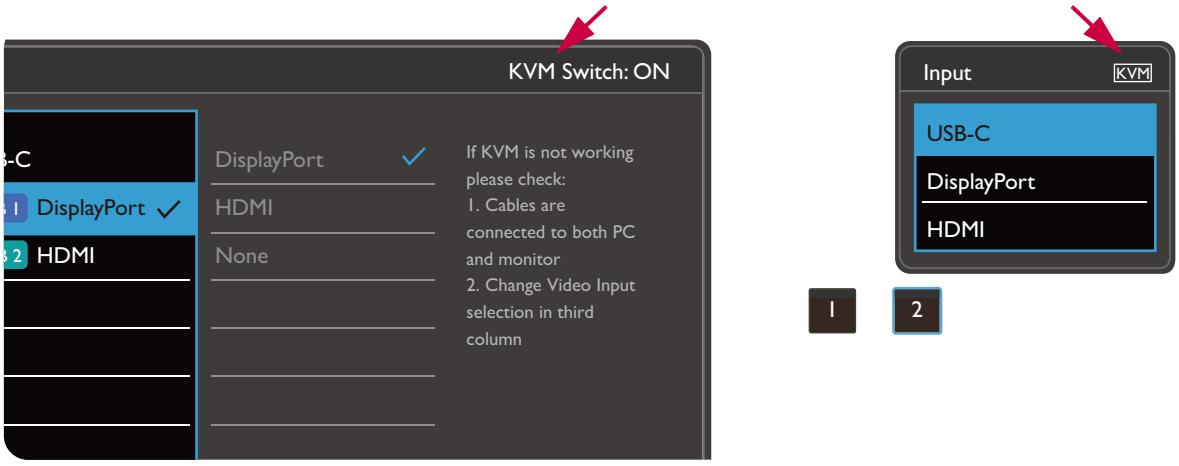

Switching to different video sources

Once the KVM connections have been made properly, you can press the default hot keys to cycle through available KVM sources easily. The way to switch KVM may vary by the way the sources are connected. You are recommended to follow the instructions in different scenarios from page 53 to switch quickly.

Switch by the custom key 2 on the rear of the monitor

The custom key 2 is set to **Input** (**Signal Input**) by default. If KVM Switch is enabled, the **Input** hotkey menu will be marked with a KVM icon. Press the key repeatedly to cycle through available options.

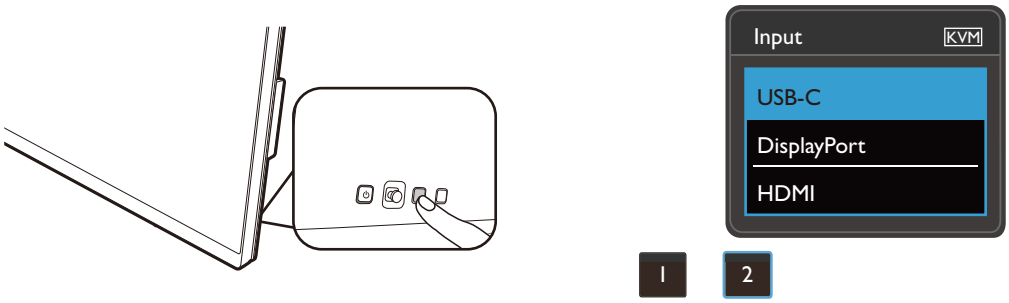

The switch also works if you have set custom key 2 to **KVM Switch**. Switch of KVM sources by the **KVM Switch** hot key is required when you have two monitors and computers as described in Scenario C: Working with two computers and two monitors on page 54.

Switch by the rotation key on Hotkey Puck Gen 2

The rotation key is set to **KVM Switch** by default. Press the key repeatedly to cycle through available options.

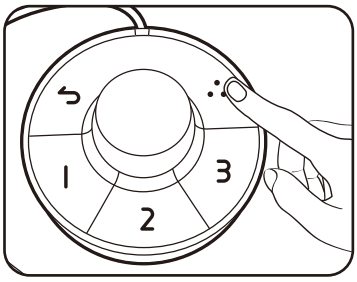

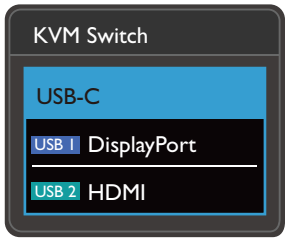

Switch from the Controller Keys on Hotkey Puck Gen 2

Customize **Controller Key 1, 2, 3** to **KVM Switch** as instructed in Customizing the Controller Keys on Hotkey Puck G2 on page 48. If the KVM connections are properly established, you can press a Control Key to switch to a desired KVM source.

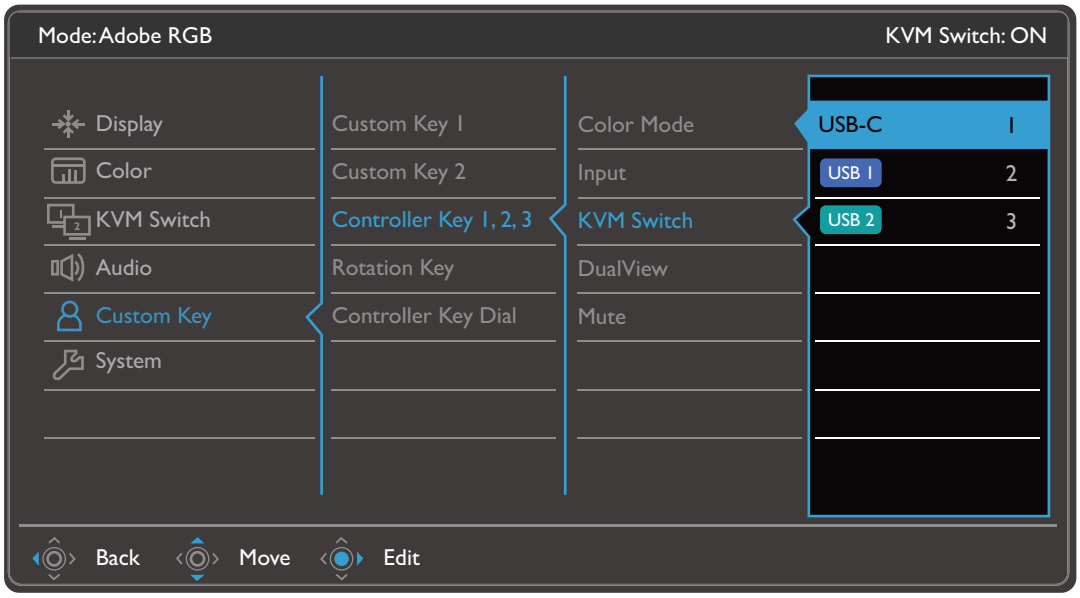

Switch from the **KVM Switch** menu

Go to **KVM Switch** to manually select a source.

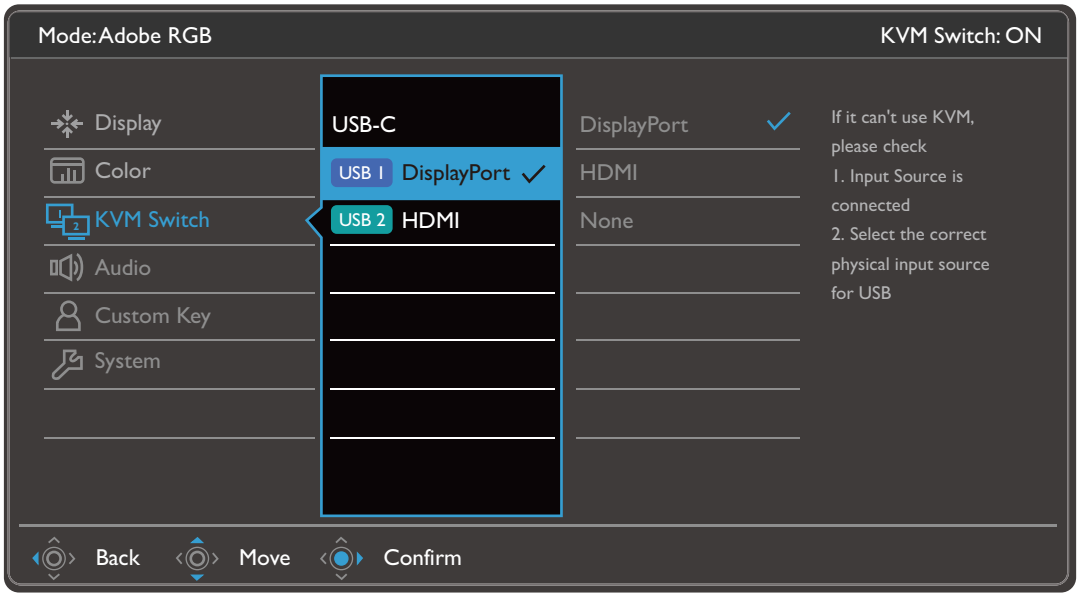

Scenario A: Working with two computers and one monitor

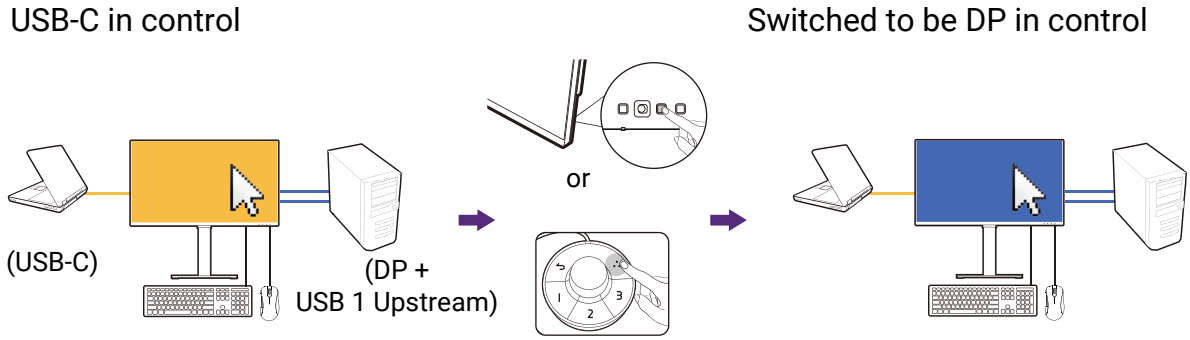

1. Establish cable connection to enable KVM function as instructed in Establishing KVM connections on page 50.
2. Go to **System** > **Power Awake** and make sure it is set to **ON**.
3. Press the custom key 2 (as the hot key for **Input** by default) or the rotation key on Hotkey Puck Gen 2 (as the hot key for **KVM Switch** by default) to switch.

Scenario B: Working in PBP mode

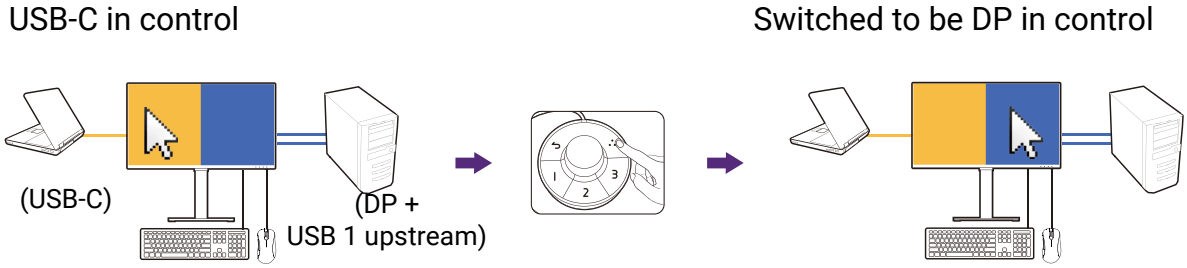

1. Establish cable connection as instructed in Establishing KVM connections on page 50.
2. Go to **System** > **Power Awake** and make sure it is set to **ON**.

3. Enable PBP function from **Signal Input** > **PBP**. Select sources properly as instructed in Displaying two sources at the same time (PIP/PBP) on page 54.
4. Press the rotation key on Hotkey Puck Gen 2 (as the hot key for **KVM Switch** by default) to switch.

Scenario C: Working with two computers and two monitors

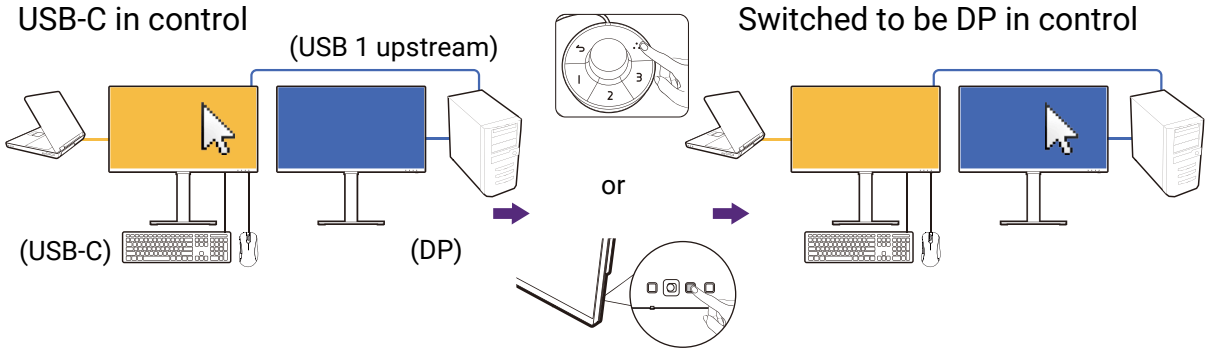

(The **KVM Switch** hot key)

1. Establish cable connection as instructed in Establishing KVM connections on page 50.
2. Go to **System** > **Power Awake** and make sure it is set to **ON**.
3. Press the rotation key on Hotkey Puck Gen 2 (as the hot key for **KVM Switch** by default) to switch. Instead of using the Hotkey Puck Gen 2, you can set one of the custom keys as the hot key for **KVM Switch** after cables are connected. See Customizing the hot keys on page 45 for more information.

Displaying two sources at the same time (PIP/PBP)

To display two input sources on the screen at the same time, you can go for Picture-in-Picture (PIP) or Picture-by-Picture (PBP) mode.

Video source selection in PIP mode

For first time use, go to **Display** > **PIP**, and press the 5-way controller. Your monitor scans for the available video sources in the following order: USB-C™, DP, and HDMI, and displays the first available one as the main source in PIP mode, and the second one as the sub source. If only one input signal is found, connect the desired video source with an appropriate cable, and go to **Display** > **PIP** > **Sub** to select the sub source manually. Under **Display** > **PIP** > **Main**, the main source can be changed manually as well.

The monitor keeps the setting of two input sources for future use until the setting is manually changed.

Go to **Display** for more adjustments.

Working with HDR technology

The information regarding HDR-compatible devices and content in this document is most up-to-date at the time of publication. For the latest information, contact your device manufacturer and content provider.

To enable HDR function, you need to have a compatible player and content.

1. Make sure a FHD/4K HDR player is ready. Players with the following names and resolutions are supported. Note that the 4K content on a FHD monitor get resized and is displayed at 1920 x 1080.

Commonly used names for FHD/4K (may vary by manufacturer)	FHD, 4K, 4K Ultra HD, UHD, UHD 4K, Ultra HD, 2160p
Commonly used names for HDR10 (may vary by manufacturer)	HDR Premium, High Dynamic Range, HDR, Ultra HD Premium

2. Make sure HDR content is available.
3. Make sure the player and the monitor have been connected via an appropriate cable:
   - the provided HDMI / DP / DP to mini DP cable / USB-C™ cable / Thunderbolt™ 3 cable (if available)
   - an HDMI cable that is HDMI High Speed or HDMI Premium certified
   - a DP / DP to mini DP cable that is DisplayPort compliance certified
   - a certified USB-C™ cable with DisplayPort Alternate Mode capability

Enabling HDR function

If the instructions in Working with HDR technology on page 54 are followed and the input content is HDR-compatible, the OSD message **HDR: On** is displayed on the screen. This means your content player and the content are HDR-compatible and the HDR function is properly enabled. The monitor is following the ST2084 standard to process the HDR content.

If the connection is complete and no OSD message is displayed, this means the content player and/or the content are not HDR-compatible. The monitor stays to the color mode recently chosen for non-HDR content.

Working with two color settings on the same image (**DualView**)

DualView helps improve your image editing efficiency by showing an image of two different color modes side-by-side.

1. Select one color mode from **Color** > **Color Mode**.
2. Go to **Color** > **DualView**. The screen is divided into two windows and the selected color mode is applied to the left window.

3. A list of available color modes for the right window is displayed. Select one to apply the setting.

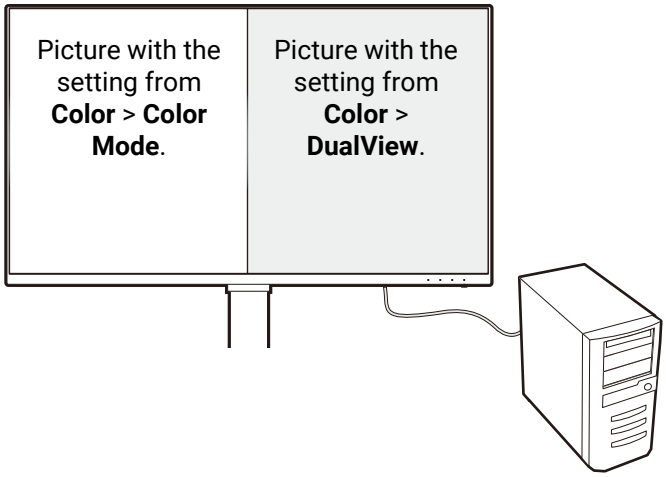

Navigating the main menu

You can use the OSD (On Screen Display) menu to adjust all the settings on your monitor. Press the 5-way controller to bring up the hot key menu, and press (**Menu**) to access the main menu. See 5-way controller and basic menu operations on page 43 for details.

Available menu options may vary depending on the input sources, functions and settings. Menu options that are not available will become grayed out. And keys that are not available will be disabled and the corresponding OSD icons will disappear. For models without certain functions, their settings and related items will not appear on the menu.

The OSD menu languages may differ from the product supplied to your region, see Language on page 70 under **System** and **OSD Settings** for more details.

For more information on each menu, please refer to the following pages:

- Display menu on page 58
- Color menu on page 60
- KVM Switch menu on page 65
- Audio menu on page 66
- Custom Key menu on page 67
- System menu on page 69

Display menu

Available menu options may vary depending on the input sources, functions and settings. Menu options that are not available will become grayed out. And keys that are not available will be disabled and the corresponding OSD icons will disappear. For models without certain functions, their settings and related items will not appear on the menu.

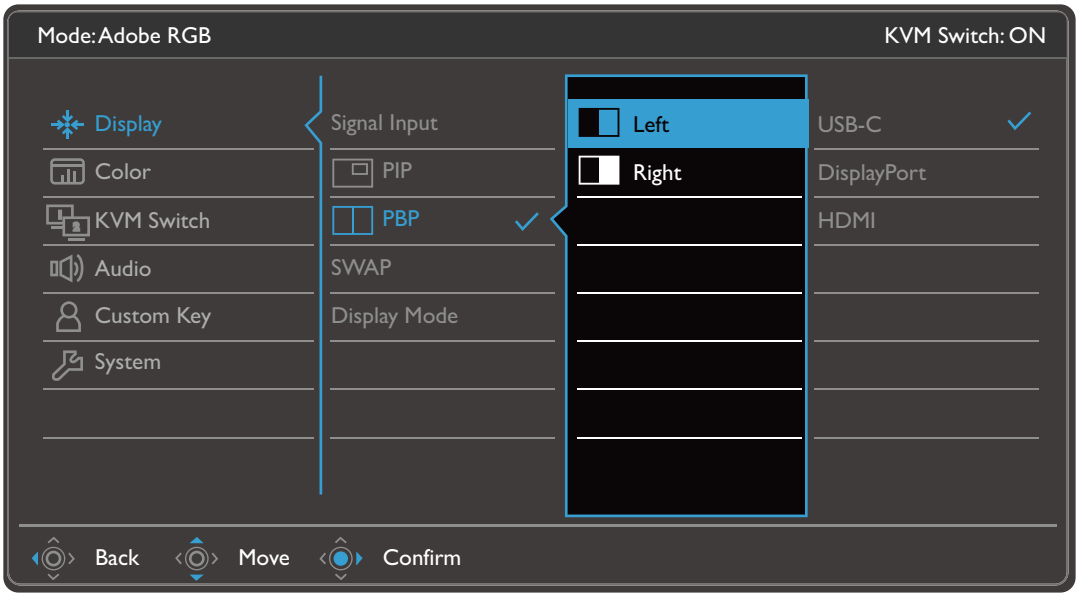

1. Select (**Menu**) from the hot key menu.
2. Use or to select **Display**.
3. Select to go to a sub menu, and then use or to select a menu item.
4. Use or to make adjustments, or use to make selection.
5. To return to the previous menu, select .
6. To exit the menu, select .

Item	Function	Range
Signal Input	Use this to change the input to that appropriate to your video cable connection type.	• **USB-C** • **DisplayPort** • **HDMI**

Item	Function		Range
PIP	Sets the PIP mode. Pictures from two independent video sources are displayed on the screen at the same time. The audio input is from the main source if the PIP mode is activated. Not available when HDR function is enabled.		
	Main	Determines the main video source.	• **USB-C** • **DisplayPort** • **HDMI**
	Sub	Determines the second video source for PIP mode.	
	PIP Size	Determines the size of the inset window in the PIP mode.	• **Small** • **Medium** • **Large**
	PIP Position	Adjusts the position of the inset window in the PIP mode.	• **Top Right** • **Top Left** • **Bottom Right** • **Bottom Left**
PBP	Sets the PBP mode to have two pictures displayed side-by-side. Determines the video sources for the left and the right windows respectively. Not available when HDR function is enabled.		• **Left** • **Right**
SWAP	Videos from the main and the second sources are swapped on the screen.		
Display Mode	This feature is provided to allow aspect ratios other than 16:9 to be displayed without geometric distortion. The options under **Display Mode** will be different depending on the input signal sources. Depending on your selection of **Color Mode**, different **Display Mode** option is pre-set. Change the setting if needed.		
	Full	Ideal for 16:9 aspect images.	
	1: 1	Displays the input image in its native resolution without scaling.	

Color menu

Available menu options may vary depending on the input sources, functions and settings. Menu options that are not available will become grayed out. And keys that are not available will be disabled and the corresponding OSD icons will disappear. For models without certain functions, their settings and related items will not appear on the menu.

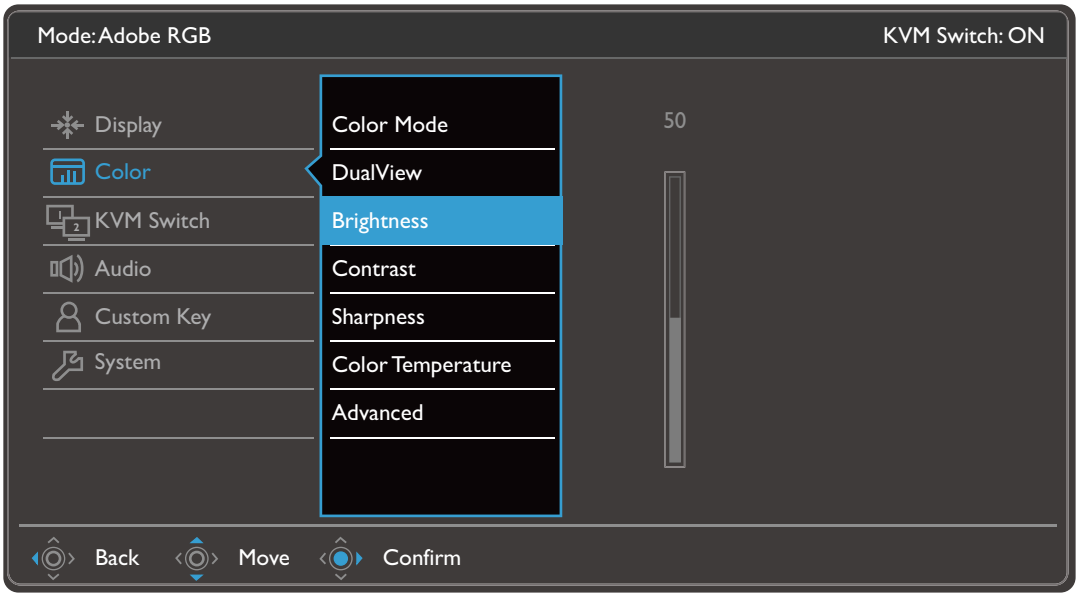

1. Select (**Menu**) from the hot key menu.
2. Use or to select **Color**.
3. Select to go to a sub menu, and then use or to select a menu item.
4. Use or to make adjustments, or use to make selection.
5. To return to the previous menu, select .
6. To exit the menu, select .

Item	Function		Range
Color Mode	Select a color mode that best suits the type of images shown on the screen.		
	sRGB	For better color matching representation with the peripheral devices, such as printers, digital cameras, etc.	
	Rec. 709	For better color matching representation with Standard Rec. 709.	
	M-book	Minimizes the visual differences between the monitor and the connected MacBook series product.	

Item	Function		Range
	CAD / CAM	Enhances the contrast if a CAD / CAM software is used.	
	Animation	Enhances the contrast of the dark shades so you could work on the details easily when making an animation.	0 ~ 10
	Low Blue Light	Decreases the blue light emitted from the display to reduce the risk of blue light exposure to your eyes. The value for each Low Blue Light mode indicates how much blue light is decreased compared with the Standard mode.	
	Multimedia	For viewing multimedia files.	
	Web Surfing	For web surfing.	
	Office	For office works or office environment.	
	Reading	For reading e-books or documents.	
	Darkroom	For image editing and viewing in a post-processing environment with a dim light. This mode enhances the sharpness and clarity of shades and shows more details.	
	HDR	For better color matching representation with High Dynamic Range (HDR) technology. Not available when PIP / PBP mode is enabled. Available only when the HDR content is detected.	
	DICOM	For viewing DICOM images. It is recommended for displaying medical images. DICOM as the abbreviation of Digital Imaging and Communications in Medicine is a standard for handling, storing, printing, and transmitting medical images.	
	User	Applies a combination of picture settings defined by users.	

Item	Function		Range
DualView	Displays the preview of screen images under the selected modes. Once enabled, the screen will be divided into two windows; the left window demonstrates the image under the mode selected from **Color Mode**, while the right window presents the image under the mode specified here. Not available when HDR function is enabled.		• **OFF** • **sRGB** • **Rec. 709** • **M-book** • **CAD / CAM** • **Animation** • **Low Blue Light** • **Darkroom** • **DICOM** • **User**
Brightness	Adjusts the balance between light and dark shades.		0 to 100
Contrast	Adjusts the degree of difference between darkness and lightness.		0 to 100
Sharpness	Adjusts the clarity and visibility of the edges of the subjects in the image.		1 to 10
Color Temperature	**6500K**	Allows video and still photographs to be viewed with natural coloring. This is the factory default color.	
	9300K	Applies a cool tint to the image and is factory pre-set to the PC industry standard white color.	
	5000K	Applies a warm tint to the image and is factory pre-set to the news print standard white color.	
	User Define	The blend of the Red, Green and Blue primary colors can be altered to change the color tint of the image. Go to the succeeding **R** (red), **G** (green), and **B** (blue) menus to change the settings. Decreasing one or more of the colors will reduce their respective influence on the color tint of the image. (e.g. if you reduce the Blue level the image will gradually take on a yellowish tint. If you reduce Green, the image will become a magenta tint.)	• **R** (0~100) • **G** (0~100) • **B** (0~100)
Advanced	**Gamma**	Adjusts the tone luminance.	• **1.8** • **2.0** • **2.2** • **2.4** • **2.6** • **sRGB**

Item	Function			Range
	Color Gamut	**sRGB**	Suitable for sRGB compatible peripherals.	
		Rec. 709	For better color matching representation with Standard Rec. 709.	
		Native	For better color matching representation with the native color gamut.	
	Hue	Adjusts the degree of how we perceive colors.		• **R** (0~100) • **G** (0~100) • **B** (0~100) • **C** (0~100) • **M** (0~100) • **Y** (0~100)
	Saturation	Adjusts the purity degree of colors.		• **R** (0~100) • **G** (0~100) • **B** (0~100) • **C** (0~100) • **M** (0~100) • **Y** (0~100)
	Uniformity	If activated, this function compensates the variation in brightness across the display area so the whole display area looks uniform in brightness. However, if high contract and brightness are desired, please turn off this function.		• **ON** • **OFF**
	RGB Range	Determines the range of color scales. Select an option that matches the RGB range setting on the connected device.		• **Auto** • **Full** • **Limited**
	Reset Color	Resets the custom color settings to the factory defaults.		• **YES** • **NO**

Available menu options to each **Color Mode**

Depending on the **Color Mode** you just set, the available options for color adjustment may vary. The list is for reference only as available options also vary by input. Menu options that are not available will become grayed out.

- V: all options are available for adjustment.
- N/A: all options are not available for adjustment.

	Settings							
Color Mode	**Brightness**	**Contrast**	**Sharpness**	**Color Temperature**	**Color Gamut**	**Gamma**	**Hue**	**Saturation**
sRGB	V	N/A	V	N/A	N/A	N/A	N/A	N/A
Rec. 709	V	N/A	V	N/A	N/A	N/A	N/A	N/A
M-book	V	V	V	V	N/A	N/A	N/A	N/A
CAD / CAM	V	V	V	N/A	N/A	V	N/A	N/A
Animation	V	N/A	V	N/A	N/A	N/A	N/A	N/A
Low Blue Light	V	V	V	N/A	N/A	N/A	N/A	N/A
Darkroom	V	V	V	N/A	N/A	N/A	N/A	N/A
HDR	V	V	V	N/A	N/A	N/A	N/A	V
DICOM	V	V	V	N/A	N/A	N/A	N/A	N/A
User	V	V	V	V	V	V	V	V

KVM Switch menu

Available menu options may vary depending on the input sources, functions and settings. Menu options that are not available will become grayed out. And keys that are not available will be disabled and the corresponding OSD icons will disappear. For models without certain functions, their settings and related items will not appear on the menu.

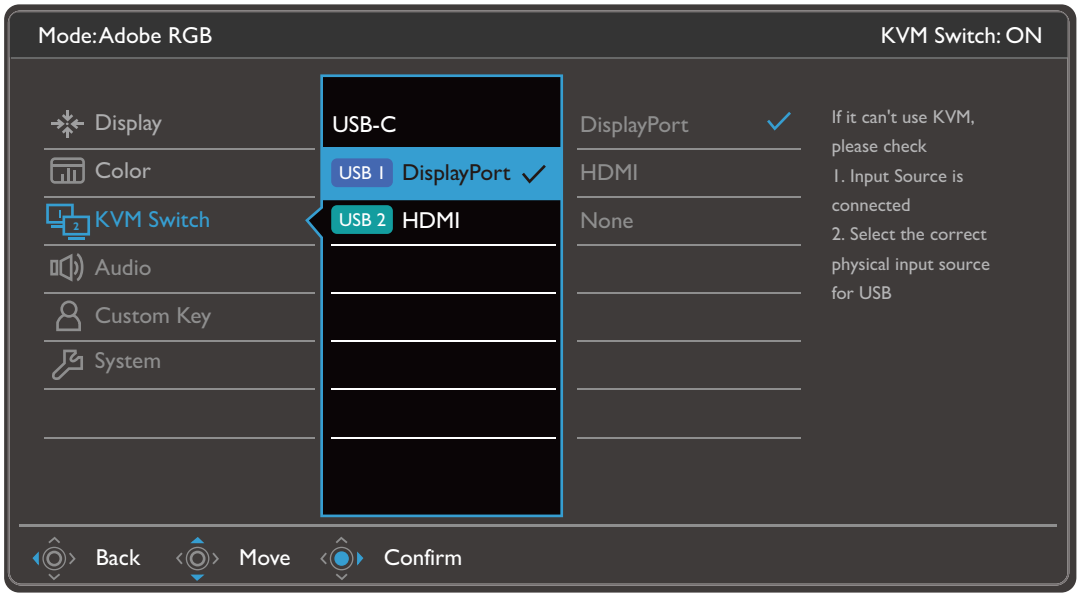

1. Select (**Menu**) from the hot key menu.
2. Use or to select **KVM Switch**.
3. Select to go to a sub menu, and then use or to select a menu item.
4. Use or to make adjustments, or use to make selection.
5. To return to the previous menu, select .
6. To exit the menu, select .

Item	Function	Range
USB-C	Switches the keyboard and mouse control over the input source / display connected to the USB-C™ port.	
USB 1 **USB 2**	Switches the keyboard and mouse control over the input source / display connected to the USB 1 Upstream / USB 2 Upstream port. The video input that goes with this USB Upstream port varies by connection. See Working with two or more video sources with one set of keyboard and mouse (KVM Switch) on page 50. **None** is selected automatically if **KVM Switch** function is enabled in Scenario C: Working with two computers and two monitors on page 54.	• **DisplayPort** • **HDMI** • **None**

Audio menu

Available menu options may vary depending on the input sources, functions and settings. Menu options that are not available will become grayed out. And keys that are not available will be disabled and the corresponding OSD icons will disappear. For models without certain functions, their settings and related items will not appear on the menu.

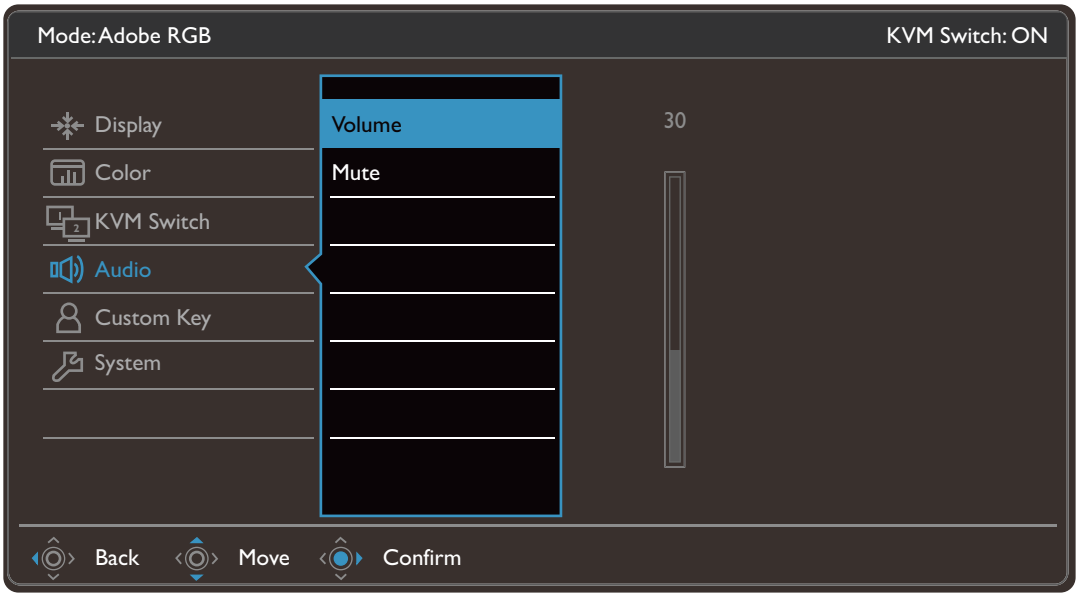

1. Select (**Menu**) from the hot key menu.
2. Use or to select **Audio**.
3. Select to go to a sub menu, and then use or to select a menu item.
4. Use or to make adjustments, or use to make selection.
5. To return to the previous menu, select .
6. To exit the menu, select .

Item	Function	Range
Volume	Adjusts the audio volume.	0 ~ 100
Mute	Mutes the audio input.	• **ON** • **OFF**

Custom Key menu

Available menu options may vary depending on the input sources, functions and settings. Menu options that are not available will become grayed out. And keys that are not available will be disabled and the corresponding OSD icons will disappear. For models without certain functions, their settings and related items will not appear on the menu.

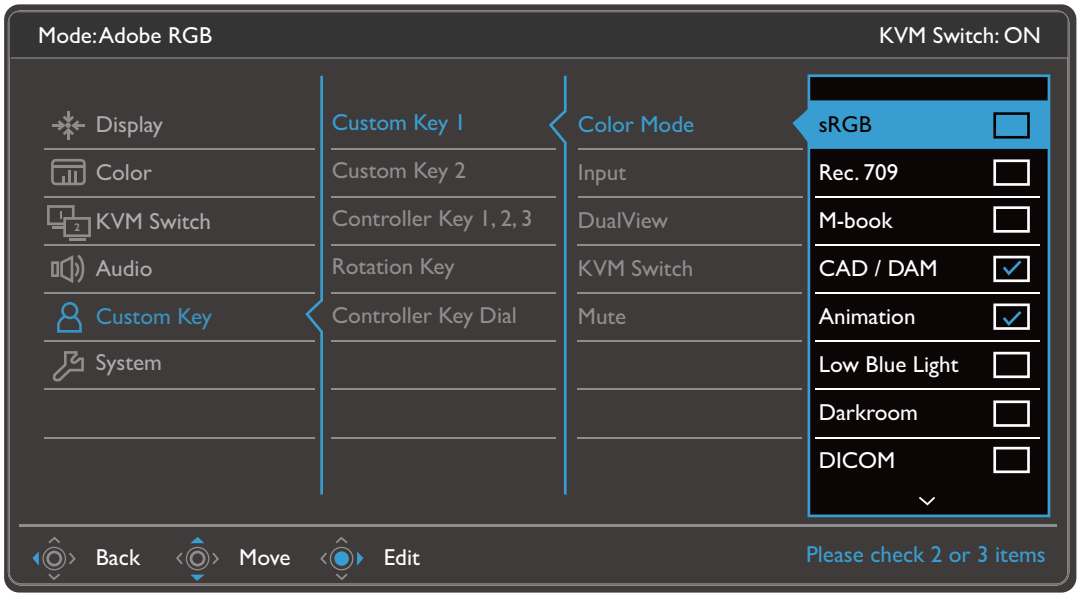

1. Select (**Menu**) from the hot key menu.
2. Use or to select **Custom Key**.
3. Select to go to a sub menu, and then use or to select a menu item.
4. Use or to make adjustments, or use to make selection.
5. To return to the previous menu, select .
6. To exit the menu, select .

Item	Function	Range
Custom Key 1	Sets the function to be accessed by custom key 1. Select a category first, and choose up to 3 options to be accessed by this key.	• **Color Mode** • **Signal Input** • **DualView** • **KVM Switch** • **Mute**
Custom Key 2	Sets the function to be accessed by custom key 2. Select a category first, and choose up to 3 options to be accessed by this key.	
Controller Key 1, 2, 3	Sets the function to be accessed by controller key 1 / 2 / 3 on Hotkey Puck G2. See Hotkey Puck G2 and its basic operations on page 47 for the location of the keys. Select a category first, and choose up to 3 options to be accessed by these keys. The numbers displayed next to the selected items are the controller keys that the options are designated to.	• **Color Mode** • **Signal Input** • **DualView** • **KVM Switch**

Item	Function	Range
Rotation Key	Sets the function to be accessed by the Rotation key on Hotkey Puck G2. See Hotkey Puck G2 and its basic operations on page 47 for the location of the key. Select a category first, and choose up to 3 options to be accessed by this key.	• **Color Mode** • **Signal Input** • **DualView** • **KVM Switch** • **Mute**
Controller Key Dial	Sets the function to be accessed by the Dial key on Hotkey Puck G2. See Hotkey Puck G2 and its basic operations on page 47 for the location of the key.	• **Brightness** • **Contrast** • **Volume**

System menu

Available menu options may vary depending on the input sources, functions and settings. Menu options that are not available will become grayed out. And keys that are not available will be disabled and the corresponding OSD icons will disappear. For models without certain functions, their settings and related items will not appear on the menu.

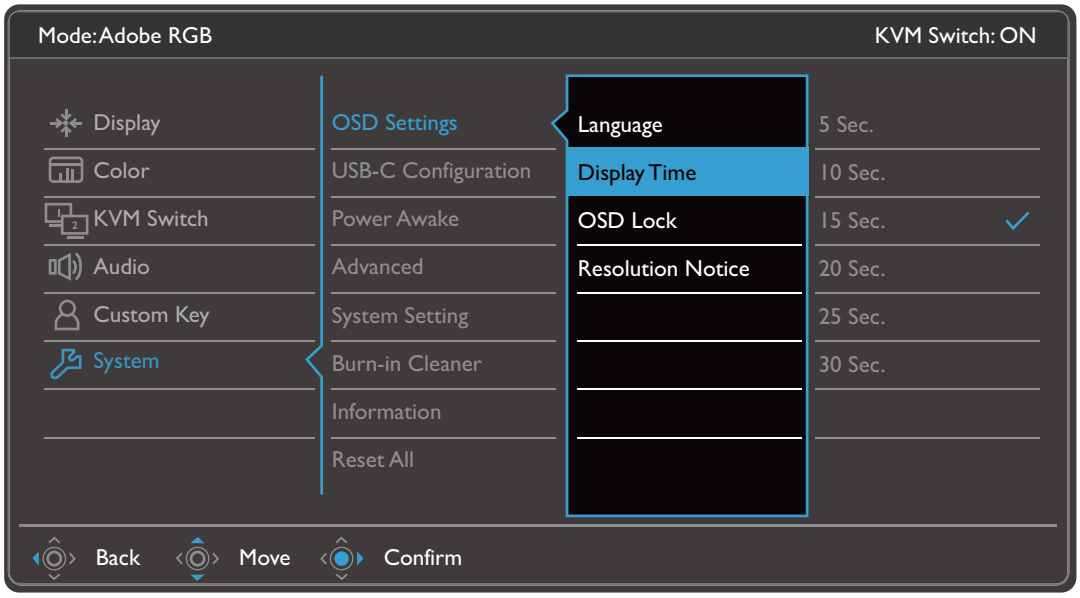

1. Select (**Menu**) from the hot key menu.
2. Use or to select **System**.
3. Select to go to a sub menu, and then use or to select a menu item.
4. Use or to make adjustments, or use to make selection.
5. To return to the previous menu, select .
6. To exit the menu, select .

Item	Function		Range
OSD Settings	**Language**	Sets the OSD menu language. The language options displayed on your OSD may differ from those shown on the right, depending on the product supplied in your region.	• **English** • **Français** • **Deutsch** • **Italiano** • **Español** • **Polski** • **Česky** • **Magyar** • **Română** • **Nederlands** • **Русский** • **Svenska** • **Português** • العربية • **日本語** • 한국어 • **繁體中文** • **简体中文**
	Display Time	Adjusts the display time of the OSD menu.	• **5 sec.** • **10 sec.** • **15 sec.** • **20 sec.** • **25 sec.** • **30 sec.**
	OSD Lock	Prevents all the monitor settings from being accidentally changed. When this function is activated, the OSD controls and hotkey operations will be disabled. To unlock the OSD controls, press and hold any key for 10 seconds.	
	Resolution Notice	Sets whether to display the resolution notice of the recommended resolution when a new input source is detected by the monitor.	• **ON** • **OFF**
USB-C Configuration	Sets the refresh rate of the input video via USB-C™ port. The USB transmission speed changes accordingly due to USB-C™ technology limitation.		
	USB 3.2 Gen 1	Refresh rate: 3840 x 2160 @ 30Hz USB transmission speed: 5 Gbps	
	USB 2.0	Refresh rate: 3840 x 2160 @ 60Hz USB transmission speed: 480 Mbps	

Item	Function		Range
Power Awake	By default, this function is disabled, and the USB ports are not supplied with power while the monitor is in standby mode. To keep supplying power to the USB ports in monitor's standby mode, change the setting to **ON**.		• **ON** • **OFF**
Advanced	**DDC/CI**	Allows the monitor settings to be set through the software on the PC. DDC/CI, short for Display Data Channel/Command Interface, which was developed by Video Electronics Standards Association (VESA). DDC/CI capability allows monitor controls to be sent via the software for remote diagnostics.	• **ON** • **OFF**
	Auto Power Off	Sets the time to power off the monitor automatically in power saving mode.	• **OFF** • **10 min** • **20 min** • **30 min**
	DisplayPort	Selects an appropriate DP standard for data transmission.	• **1.1** • **1.4**
	OSD Key Bri.	Adjusts the brightness of the power key's LED indicator.	• **ON** • **OFF**
	AMA	Improves the gray level response time of the LCD panel.	• **OFF** • **High** • **Premium**
System Setting	Shows the current monitor property settings.		• **Signal Input** • **Timing** • **Brightness** • **Contrast** • **Color Gamut** • **Pixel Encoding** • **RGB Range**

Item	Function	Range
Burn-in Cleaner	Screen burn-in or image retention may be found on the screen if a still image is displayed for an extended period of time. Enable this function to help reduce the visible fixed lines or shades on the screen by showing several default patterns. Once enabled, to disable this function, press any of the control keys. Screen burn-in occurs due to panel limitation and should not be considered as a manufacturing defect. To avoid screen burn-in, do not play a still image for an extended period of time in the first place. Use your computer's power management function.	• **YES** • **NO**
Information	Displays the product information.	• **Model Name** • **Version** • **Usage Time**
Reset All	Resets all mode, color and geometry settings to the factory default values.	• **YES** • **NO**

Troubleshooting

Frequently asked questions (FAQ)

Imaging

The image is blurred.

Download **Resolution file** from the website (see Product support on page 3). Refer to "**Adjusting the Screen Resolution**". And then select the correct resolution, refresh rate and make adjustments based on these instructions.

Does the blurring only occur at resolutions lower than the native (maximum) resolution?

Download **Resolution file** from the website (see Product support on page 3). Refer to "**Adjusting the Screen Resolution**". Select the native resolution.

Pixel errors can be seen.

One of several pixels is permanently black, one or more pixels are permanently white, one or more pixels are permanently red, green, blue or another color.

- Clean the LCD screen.
- Cycle power on-off.
- These are pixels that are permanently on or off and is a natural defect that occurs in LCD technology.

The image has a faulty coloration.

It has a yellow, blue or pink appearance.

Go to **Color**, **Advanced**, and **Reset Color**, and then choose **YES** to reset the color settings to the factory defaults.

If the image is still not correct and the OSD also has faulty coloration, this means one of the three primary colors is missing in the signal input. Now check the signal cable connectors. If any pin is bent or broken off, please contact your dealer to get necessary support.

The image is distorted, flashes or flickers.

Download **Resolution file** from the website (see Product support on page 3). Refer to "**Adjusting the Screen Resolution**". And then select the correct resolution, refresh rate and make adjustments based on these instructions.

You are running the monitor at its native resolution, but the image is still distorted.

Images from different input sources may appear distorted or stretched on the monitor running at its native resolution. To have the optimal display performance of each type of input sources, you can use the **Display Mode** function to set a proper aspect ratio for the input sources. See Display Mode on page 59 for details.

The image is displaced in one direction.

Download **Resolution file** from the website (see Product support on page 3). Refer to "**Adjusting the Screen Resolution**". And then select the correct resolution, refresh rate and make adjustments based on these instructions.

Faint shadow from the static image displayed is visible on the screen.

- Activate the power management function to let your computer and monitor go into a low power "sleep" mode when not actively in use.
- Use a screensaver to prevent the occurrence of image retention.

Power LED indicator

The LED indicator is white or orange.

- If the LED lights up in solid white, the monitor is powered on.
- If the LED is illuminated in white and there is a message **Out of Range** on the screen, this means you are using a display mode that this monitor does not support, please change the setting to one of the supported mode. Download **Resolution file** from the website (see Product support on page 3). Refer to "**Adjusting the Screen Resolution**". And then select the correct resolution, refresh rate and make adjustments based on these instructions.
- If the LED is illuminated in orange, the power management mode is active. Press any button on the computer keyboard or move the mouse. If that does not help, check the signal cable connectors. If any pin is bent or broken off, please contact your dealer to get necessary support.
- If the LED is off, check the power supply mains socket, the external power supply and the mains switch.

OSD controls

The OSD controls are inaccessible.

To unlock the OSD controls when it is preset to be locked, press and hold any key for 10 seconds.

OSD messages

A message **Out of Range** on the screen during computer boot up process.

If there is a message **Out of Range** on the screen during computer boot up process, this means computer compatibility caused by operating system or graphic card. The system will adjust the refresh rate automatically. Just wait until the operating system is launched.

Audio

No sound can be heard from the connected external speakers.

- Remove your headphone (if the headphone is connected to the monitor).
- Check whether the headphone jack is properly connected.
- If the external speakers are USB-powered, check whether the USB connection is OK.
- Increase the volume (volume may be muted or too low) on the external speakers.

KVM Switch

No response after switching to a KVM source.

Check the cable connections and menu settings in the following order.

- Make sure the cables are properly connected and the **KVM Switch** function is enabled. See Establishing KVM connections on page 50 for more information.
- The monitor remembers the KVM pairing setting before it was turned off and may not recognize the new cable connections immediately if changed. You can check if the correct input source has been selected for the KVM source from **KVM Switch** > **USB 1** or **USB 2**, depending on the KVM source you are switching to.
- Press the rotation key on Hotkey Puck Gen 2 (as the hot key for **KVM Switch** by default).
- If you don't have a hot key for **KVM Switch** and the computer of the KVM source you are switching to is in Sleep mode, switch the input to the sleeping computer, and re-connect your keyboard or mouse manually to the sleeping computer to wake it up. (Windows only) If it does not work, try to press the power button to wake the computer up.

The input was switched to the other source. However, there is no image or cursor displayed.

If you go for Scenario A: Working with two computers and one monitor or Scenario B: Working in PBP mode on page 53, check if **None** has been selected from **KVM** > **USB 1** / **USB 2** (depending on the availability). If so, the screen does not display anything from the second source as there is none. You cannot control the current display either as the keyboard and mouse control has been switched away. In this case, select a video input manually from **Display** > **Signal Input**.

USB-C™ connection (models with USB-C™ ports)

No video or audio output from the laptop with USB-C™ connection.

Check the cable connections and menu settings in the following order.

- Check if the USB-C™ cable has been connected to the monitor and the laptop properly. See Connect the PC video cable. on page 22 for more information.
- Check if the input source has been selected to **USB-C** on **Display** > **Signal Input**.

Need more help?

If your problems remain after checking this manual, please contact your place of purchase or visit the local website from Support.BenQ.com for more support and local customer service.