DS60-600BL2

NEOMOUNTS DESK MONITOR ARM

SPECIFICATIONS

GENERAL

Min. screen size*	10 inch
Max. screen size*	32 inch
Max. weight	8 kg (per screen)
Screens	2
VESA minimum	75x75 mm
VESA maximum	100x100 mm
Desk mount	Grommet Clamp
Distance to wall	9.9-45.9 cm

FUNCTIONALITY

Type	Full motion
Height adjustment	14-40 cm
Width adjustment	39.7 cm
Depth adjustment	9.9-45.9 cm
Lockable	Not lockable
Tilt (degrees)	+45°. -45°
Swivel (degrees)	+90°. -90°
Rotate (degrees)	+180°. -180°
Height	45 cm
Width	90.8 cm
Depth	10.5 cm

INFORMATION

Color	Black
Main material	Steel
Warranty	5 year
EAN code	8717371446178

*Please note: The inch sizes stated are just an indication, combined with the weight and VESA sizes. The maximum weight and VESA size are absolute restrictions for the products and should not be exceeded.

Neomounts

Neomounts

Neomounts DS60-600BL2 full motion desk monitor arm for 10-32" screens - Black

The Neomounts DS60-600BL2 NERO monitor arm is the perfect choice for those looking for a sturdy and versatile solution for two monitors up to 32" with a weight capacity of 8 kg per screen. This full motion monitor arm offers maximum flexibility thanks to its versatile tilt (90°), rotate (360°) and swivel (180°) technology, enabling you to always find the optimal viewing angle for an ergonomic working posture.

The NERO desk mount features manual height and depth adjustment, allowing you to adjust your workspace completely to your liking. In addition, the clever 180° stop mechanism prevents the mount from making contact with the wall or separation panel when installed near it. The welded base guarantees optimal stability and sturdiness. The practical cable management system ensures neat routing of cables. In addition, the base of the DS60-600BL2 provides a convenient space to place a phone, for a tidy desk.

The DS60-600BL2 is suitable for screens that meet pattern 75x75 or 100x100 mm. For non-standard hole patterns, Neomounts has various VESA optional adapter plates available. For a seamless connection of the screens, the micro-adjustment function can be used.

Installation of the NERO is quick and easy. The Easy-release system makes it easy to attach or detach the screen. Additionally, fixing the clamp to the desk only takes a few actions and, in addition to manual installation, can also be installed using an Allen key or drill for even faster installation. The NERO monitor arm's quick-span lever also allows for easy adjustment of the arm's height without additional tools.

With sustainability in mind, the packaging of the NERO monitor arms is 100% plastic-free and made entirely of recyclable cardboard and paper.

Neomounts®

DS60-600BL2 NEOMOUNTS DESK MONITOR ARM

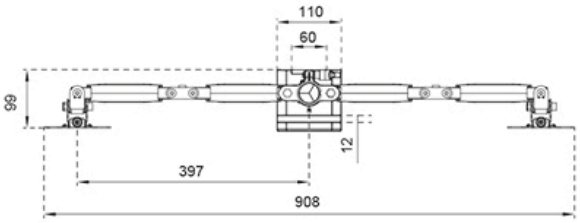

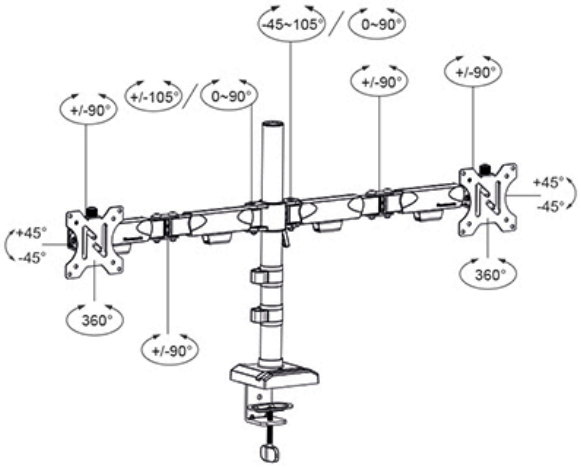

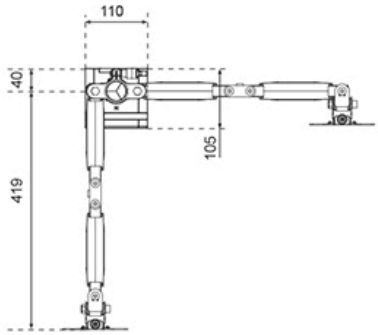

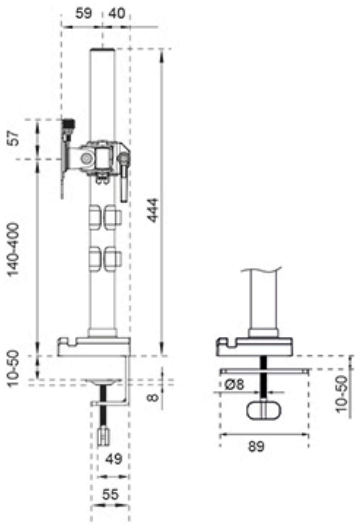

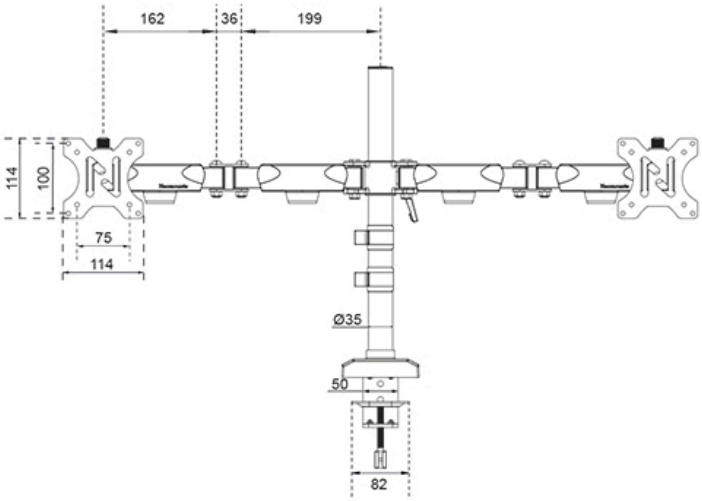

Neomounts

Measuring unit: mm